07 Tipper Superstructures

Scattolini Tipper

Durable, reliable and safe. Suitable for all conditions, even for the most demanding applications. Self-lubricating device for all moving parts, with maintenance-free lubrication.

Main advantages of the tipper superstructure

- Loading platform and front panel structure in hot-dip galvanised steel with polyester powder coating. Side and rear panels in anodised aluminium alloy, 40 mm high, with an exclusively designed profile as an alternative to hot-dip galvanised powder coated steel panels.
- Exclusive design, screw-in and removable front and back so they can be easily replaced. Anti-tip safety handle with limited protrusion even in the open position, sliding components and internal sliding conduit made of reinforced nylon and Teflon, self-lubricating for less wear and therefore a longer service life. Smooth, intuitive operation. Double opening movement and connecting mechanism after crossing the gate. Plug equipped with load lock and catch with anti-vibration mechanism supplemented with compression spring.
- Designed for cab protection and patented rear ladder racks. Ladder and cab protection equipped with large boundary holes for load securing, protection made of non-slip, wear-resistant PVC with ergonomic shape to protect and safely support long and heavy loads.
- Rear joint with double opening and manual release. Load securing mechanisms throughout the assembly.
- Load securing straps can be attached using the slot in the rub rail. Chrome plated lapped cylinder. Maximum durability without fading of parts subject to wear. Able to withstand adverse weather conditions, i.e. rust.
- Isolation switch. Safety fuse. Button control panel with ergonomic spiral cable and sponge-shaped emergency lock.
- Emergency buzzer inside and out. Designed for the installation of optional proximity sensors to detect obstacles when the lorry is reversing, plus simultaneous indication when the rear boards are open and when loose materials are unloaded from the rear.
- Anti-vibration Teflon plates on the secondary frame. PVC tool box fixed with die-cast aluminium drop rail to prevent accidental opening.

Scattolini tipper delivered for brands

CITROËN

FIAT PROFESSIONAL

Ford

IVECO

MAN

Mercedes-Benz

NISSAN

PEUGEOT

RENAULT

TOYOTA

UNIMOG

Diagram of the correct placement of the storage points of a three-sided tipper

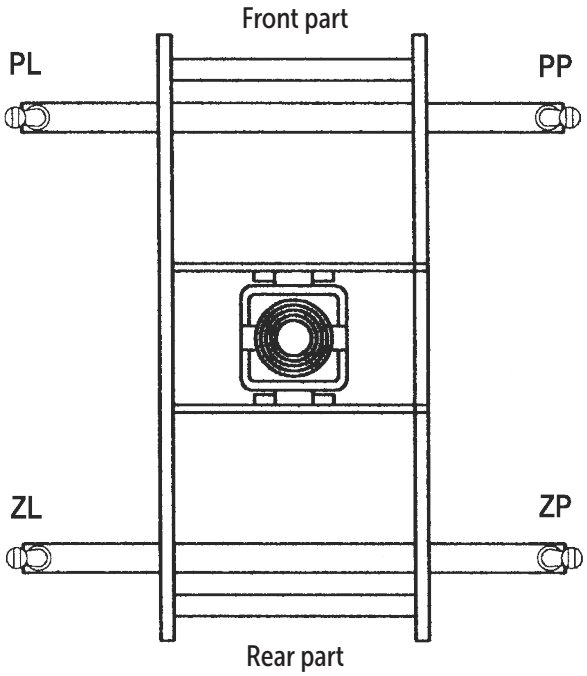

Load capacity applies to all 4 storage points simultaneously

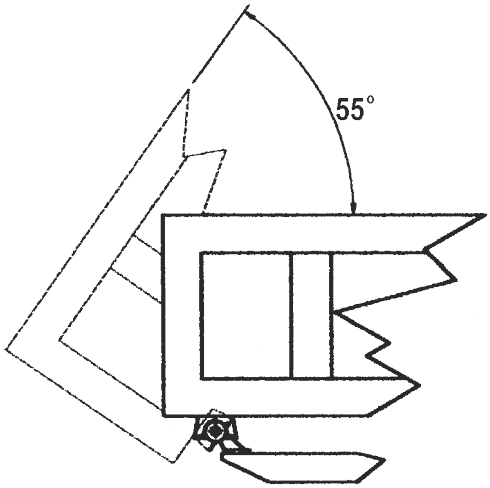

The ball holder must be in the position shown in the picture. This allows a tilt angle of 55°.

CZ +420 548 424 011 | info@trans-technik.cz | www.trans-technik.cz
SK +421 417 073 011 | trans-technik@trans-technik.sk | www.trans-technik.sk
RO +40 265 266 538 | contact@trans-technik.ro | www.trans-technik.ro
PL +48 438 434 050 | biuro@trans-technik.pl | www.trans-technik.pl

COMPONENTS FOR A THREE-SIDED TIPPER FOR A MAX. LOAD CAPACITY OF 2 t

0711044.000
Ball ø 43

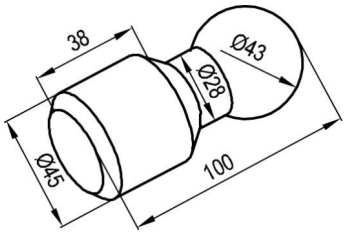

0711044.002
Ball holder ø 44
Type 1

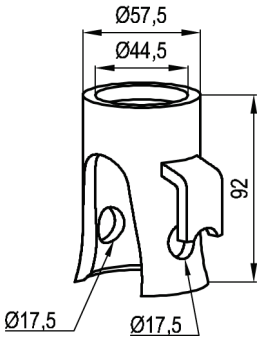

0711044.003
Ball holder ø 44
Type 2

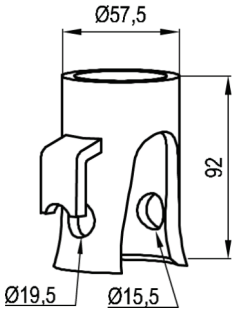

0711044.001
Plastic insert

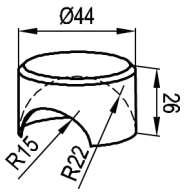

0711044.005
Locking pin ø 16
Material: Fe 360

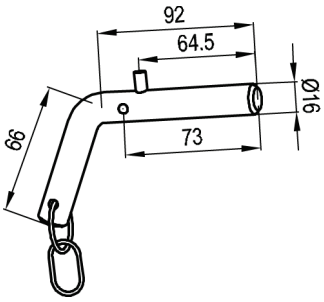

0711044.006
Locking pin ø 18 / 14
Material: Fe 360

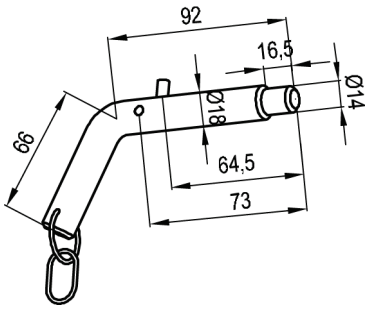

CZ +420 548 424 011 | info@trans-technik.cz | www.trans-technik.cz
SK +421 417 073 011 | trans-technik@trans-technik.sk | www.trans-technik.sk
RO +40 265 266 538 | contact@trans-technik.ro | www.trans-technik.ro
PL +48 438 434 050 | biuro@trans-technik.pl | www.trans-technik.pl

COMPONENTS FOR A THREE-SIDED TIPPER WITH A MAX. LOAD CAPACITY OF 2 t

0711050.000
Ball ø 50
Non-galvanized
Weight: 1.700 kg

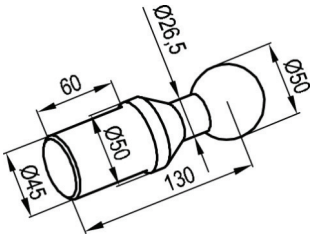

0711050.001
Locking pin ø 14
Material: galvanized steel
Weight: 0.300 kg

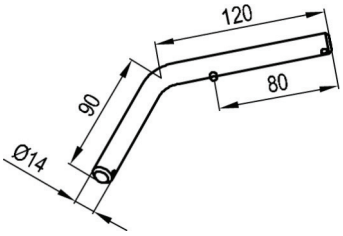

0711050.002
Locking pin ø 16 / 12
Material: galvanized steel
Weight: 0.300 kg

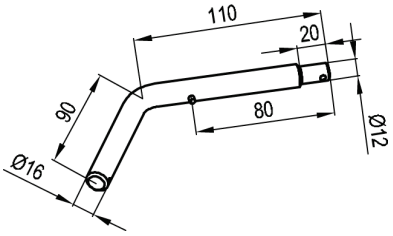

0711050.007
PVC insert for ø 50
Weight: 0.040 kg

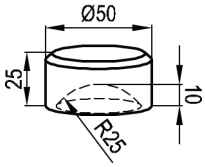

BALL HOLDERS Ø 50 - SCREW-IN

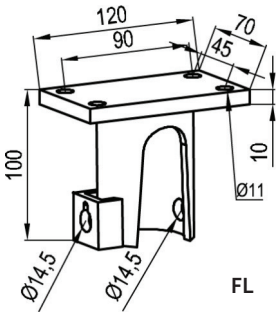

FL

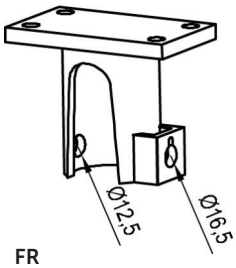

FR

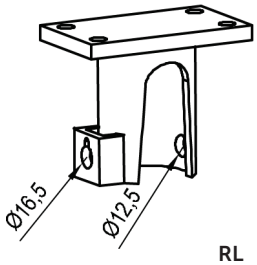

RL

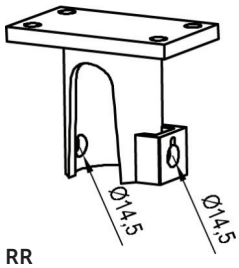

RR

TT-number	Placement	Galvanized	Weight kg
0711050.003	FL	YES	1.320
0711050.004	RR		
0711050.005	RL		
0711050.006	FR		

BALL HOLDERS Ø 50 - WELDING

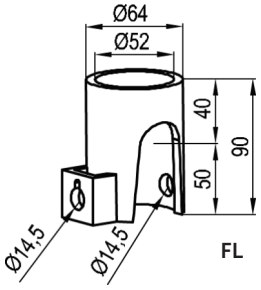

FL

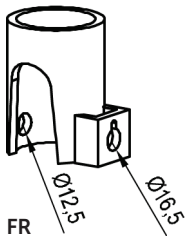

FR

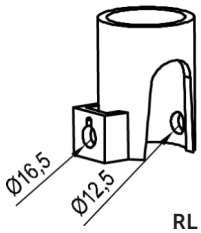

RL

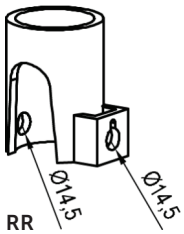

RR

TT-number	Placement	Galvanized	Weight kg
0711050.201	FL	NO	0.700
0711050.202	RR		
0711050.203	RL		
0711050.204	FR		

COMPONENTS FOR A THREE-SIDED TIPPER WITH A MAX. LOAD CAPACITY OF 3.5 t

0711060.000
Ball ø 60
Non-galvanised
Weight: 2.440 kg

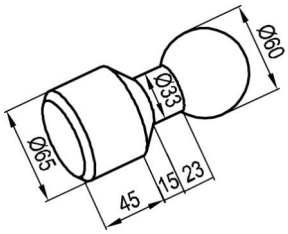

0711060.001
Locking pin ø 16
Material: galvanized steel
Weight: 0.350 kg

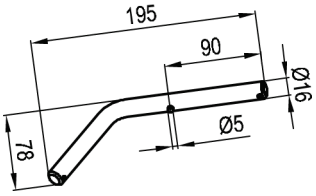

0711060.002
Locking pin ø 18 / 14
Material: galvanized steel
Weight: 0.330 kg

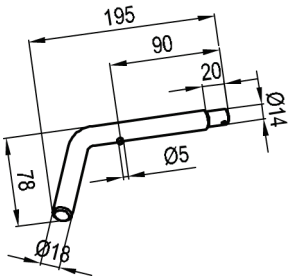

0711060.007
PVC insert for ø 60
Weight: 0.040 kg

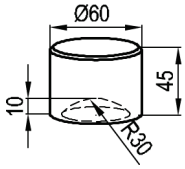

BALL HOLDERS Ø 60 - WELDED

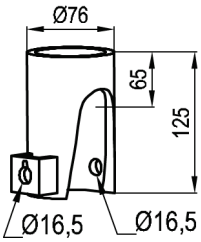

FL

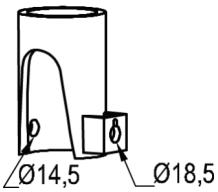

FR

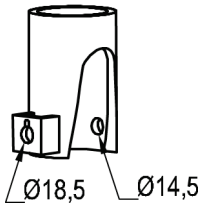

RL

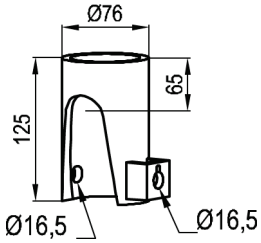

RR

TT-number	Placement	Galvanized	Weight kg
0711060.003	FL	NO	1.350
0711060.004	RR		
0711060.005	RL		
0711060.006	FR		

0711050.500
Components for a tipper with a 50mm diameter-set
and a load capacity of 3.5 t

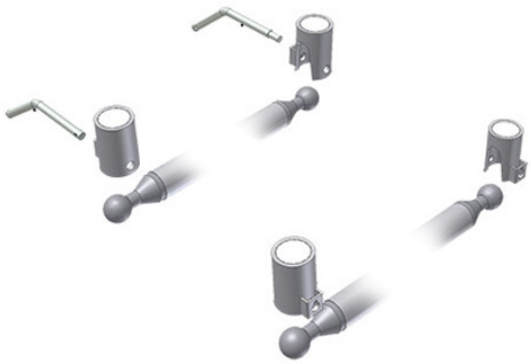

CZ +420 548 424 011 | info@trans-technik.cz | www.trans-technik.cz
SK +421 417 073 011 | trans-technik@trans-technik.sk | www.trans-technik.sk
RO +40 265 266 538 | contact@trans-technik.ro | www.trans-technik.ro
PL +48 438 434 050 | biuro@trans-technik.pl | www.trans-technik.pl

0711043.000
Components for tipper with a 43mm diameter-set and a load capacity of 4 t

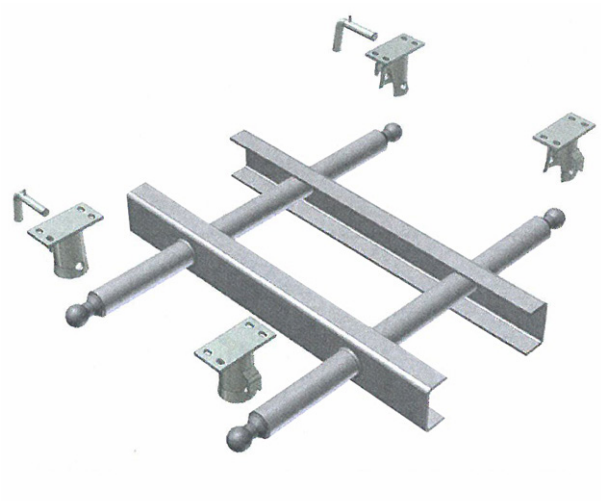

COMPONENTS FOR THREE-SIDED TIPPER WITH A MAX. LOAD CAPACITY OF 5 t

0711073.000
Ball ø 73
Non-galvanised
Weight: 3.700 kg

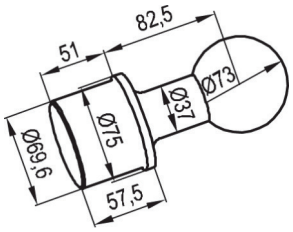

0711073.001
Locking pin ø 16
Material: galvanized steel
Weight: 0.350 kg

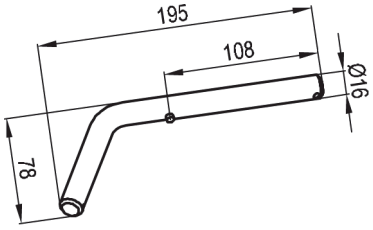

0711073.002
Locking pin ø 18 / 14
Material: galvanized steel
Weight: 0.350 kg

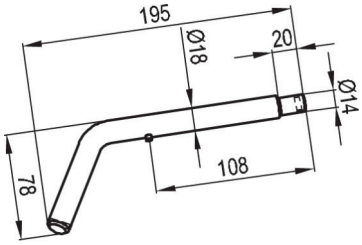

0711073.007
PVC insert for ø 75
Weight: 0.080 kg

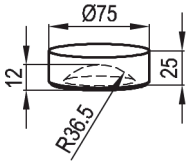

BALL HOLDERS Ø 73 - SCREW-IN

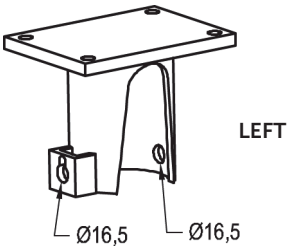

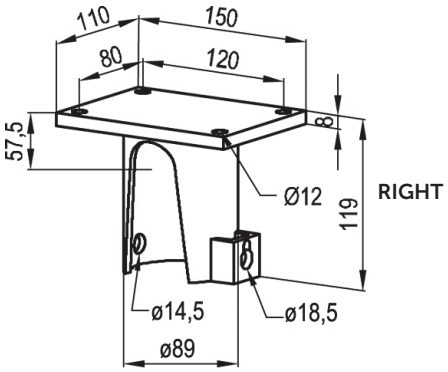

TT-number	Placement	Galvanized	Weight kg
0711073.013	LEFT	YES	3.320
0711073.016	RIGHT		

BALL HOLDERS Ø 73 - WELDED

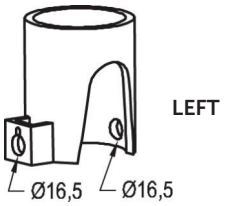

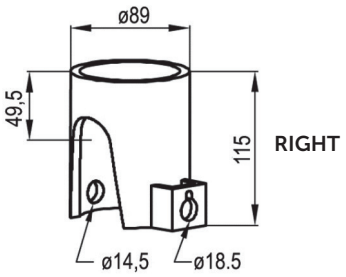

TT-number	Placement	Galvanized	Weight kg
0711073.201	LEFT	NO	2.370
0711073.204	RIGHT		

TIPPERS WITH ANTI-VIBRATION SYSTEM - 3000 SERIES - SETS

Complete beam sets for three-sided tippers - 3000 series with anti-vibration system.
The anti-vibration system reduces vehicle noise when driving without a load.

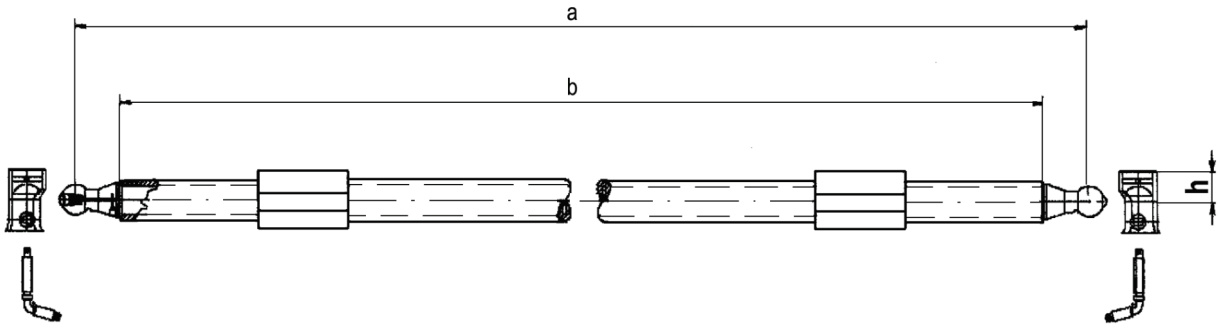

TT number	Name	Set includes [pcs]						
		Ball with beams	Holder type 1	Holder type 2	PVC insert	Pin type 1	Pin type 2	stabilizer
0711311.120	Complete set for load capacity max. 12 tonnes	2	2	2	4	2	2	
0711311.240	Complete set for load capacity max. 24 tonnes	2	2	2	4	2	2	2
0711311.360	Complete set for load capacity max. 36 tonnes	2	2	2	4	2	2	2

These load capacities are given as a guide and depend on the superstructure design and experience in using the kits.

Max. load capacity of the vehicle (t)	3000 series system parts							
	balls with beams	* balls	Holder type 1	Holder type 2	PVC insert	Pin type 1	Pin type 2	stabilizer
12	**0711310.120**	**0711300.060**	**0711301.060**	**0711302.060**	**0711303.060**	**0711304.060**	**0711305.060**	/
24	**0711310.240**	**0711300.080**	**0711301.080**	**0711302.080**	**0711303.080**	**0711304.080**	**0711305.080**	**0711480.000**
36	**0711310.360**	**0711300.100**	**0711301.100**	**0711302.100**	**0711303.100**	**0711304.100**	**0711305.100**	**0711478.000**

0711244.000
Pin 24 mm for ball holder
80 mm

0711271.000
Seating fork type 8000
28 t

0711272.000
Fork holder type 8000
24/24 mm 28 t

Beams for three-sided tippers - 3000 series with anti-vibration system

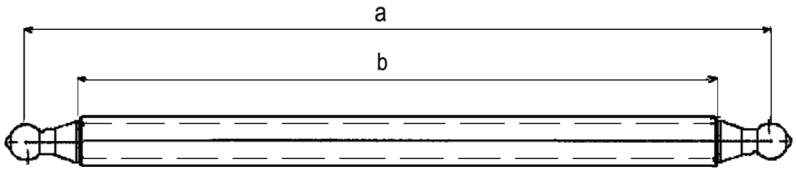

BEAMS (BALL + TUBE)

TT number	Max. load capacity of the vehicle t	Dimensions mm					Weight kg
		a*	b	ball ø	h	TR. ø x s	
0711310.120	12	2050	1830	60	60	82 x 12.5	44.00
0711310.240	24	2050	1810	80	85	108 x 12.5	71.00
0711310.360	36	2050	1750	100	90	127 x 16	107.00

Balls for three-sided tippers - 3000 series with anti-vibration system

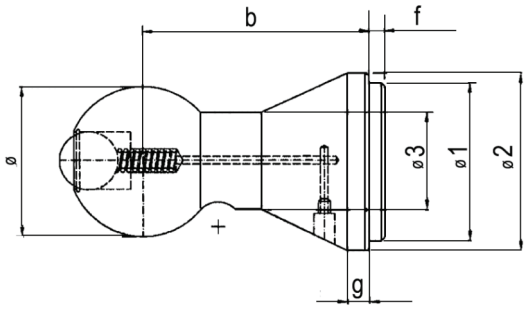

TT-number	Load capacity t	Dimensions mm							Lubrication	Weight kg
		ø	ø 1	ø 2	ø 3	b	f	g		
0711300.060	12	60	65	65	35	120	0	40	yes	3.000
0711300.080	24	80	90	97	52	120	10	16	yes	5.600
0711300.100	36	100	105	118	69	150	15	15	no	9.800
0711300.120	45	120	106	118	78	180	20	20	no	15.100

PVC insert for three-sided tippers - 3000 series with anti-vibration system

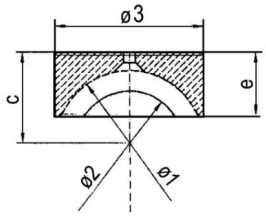

TT-number	Dimensions mm					Weight kg
	ø 1	ø 2	ø 3	c	e	
0711303.060	60	40	61	36	24	0.070
0711303.080	80	63	80.9	58	40.7	0.130
0711303.100	100	72	101	62.5	44	0.190
0711303.120	120	84	120	-	55	0.630

BALL HOLDERS FOR TIPPERS WITH ANTI-VIBRATION SYSTEM - 3000 SERIES

Type 1

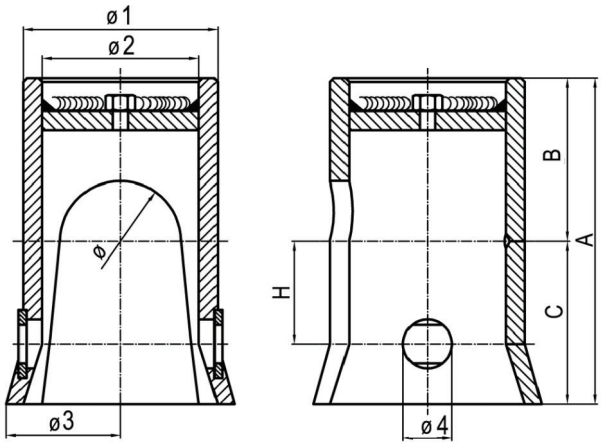

Type 2

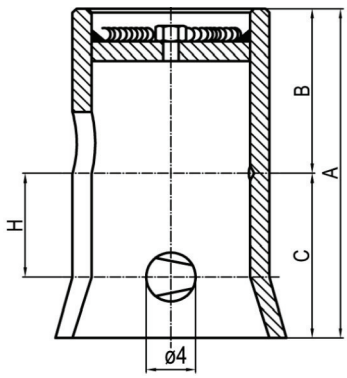

TT-number	Type	Load capacity t	TT-number PVC inserts	Dimensions									
				ø	ø 1	ø 2	ø 3	ø4	A	B	C	H	kg
0711301.060	1	12	**0711303.060**	60	76	62	86	20	125	60	65	41	1.560
0711301.080	1	24	**0711303.080**	80	102	82	119	25	170	85	85	53.5	3.750
0711301.100	1	36	**0711303.100**	100	127	102	146	30	190	90	100	65.5	6.200
0711301.120	1	45	**0711303.120**	120	152	121	-	30.5	250	140	110	-	12.300
0711302.060	2	12	**0711303.060**	60	76	62	86	20	125	60	65	41	1.560
0711302.080	2	24	**0711303.080**	80	102	82	119	25	170	85	85	53.5	3.750
0711302.100	2	36	**0711303.100**	100	127	102	146	30	190	90	100	65.5	6.200
0711302.120	2	45	**0711303.120**	120	152	121	-	30.5	250	140	110	-	12.300

LOCKING PINS FOR TIPPERS WITH ANTI-VIBRATION SYSTEM - 3000 SERIES

Type 1

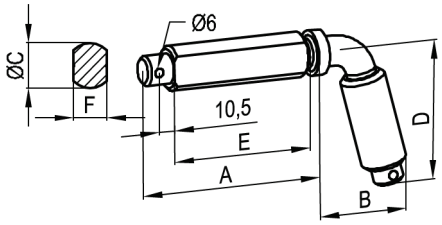

Type 2

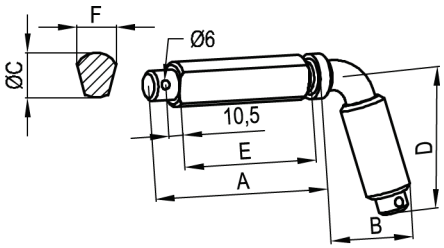

TT-number	Type	ball Ø mm	Dimensions						Weight kg
			A	B	ø C	D	E	F	
0711304.060	1	60	95	50	20	68	71.5	14	0.330
0711304.080	1	80	120.5	65	25	92	97	19	0.700
0711304.100	1	100	142.5	70	30	92	119	22	1.080
0711304.120	1	120	overall length 280 mm		30	-	-	22	1.160
0711305.060	2	60	95	50	20	68	71.5	17	0.330
0711305.080	2	80	120.5	60	25	92	97	22	0.700
0711305.100	2	100	142.5	70	30	92	119	26	1.080
0711305.120	2	120	overall length 280 mm		30	-	-	26	1.160

7. page 13

COMPONENTS FOR 3000 FORK + BALL SET
COMPONENTS FOR 3000 BALL SET SHOWN ON PAGE 07.01.11.0 - 07.01.12

Components for set 3000 forks for 24 t load capacity

0711412.000
Seat fork
Weight: 3.85 kg

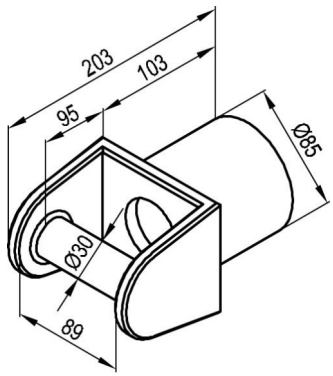

0711445.000
Fork holder
Weight: 3.4 kg

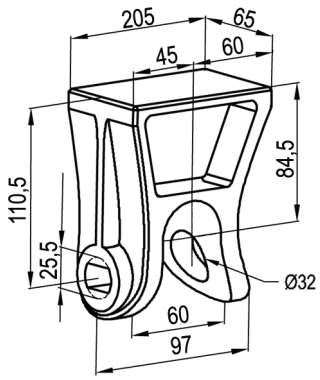

0711446.000
Fork holder
Weight: 3.4 kg

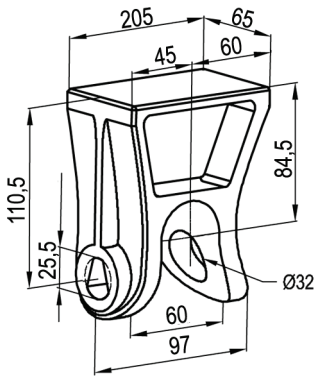

0711304.080
Pin TYPE 1
Weight: 0.4 kg

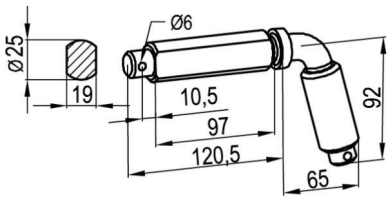

0711305.080
Pin TYPE 2
Weight: 0.4 kg

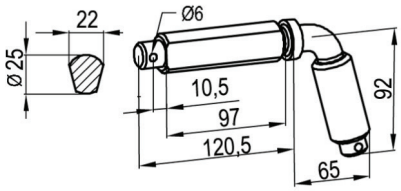

0711304.100
Pin TYPE 1
Weight: 0.4 kg

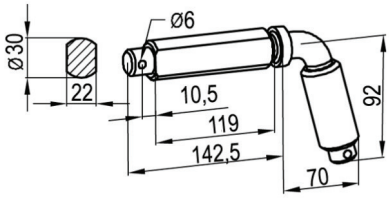

0711305.100
Pin TYPE 2
Weight: 0.4 kg

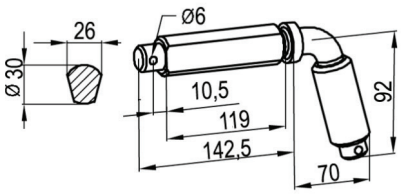

COMPLETE BEAMS FOR THREE-SIDED TIPPERS

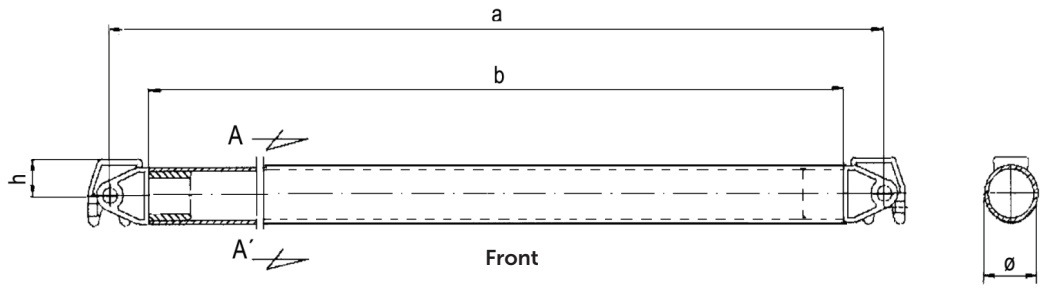

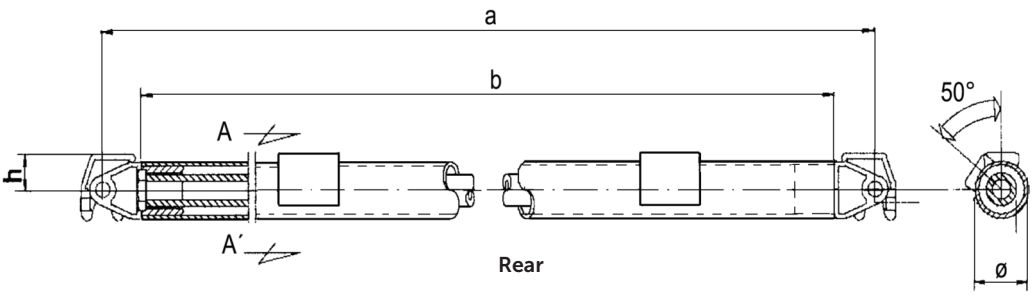

TT-number		Load capacity	Dimensions mm					Weight kg
front	rear	t	a*	b	h	ø	front	rear
0711400.030	**0711401.030**	30.0	2050	1830	91	127 x 16	96.000	120.000

*** Other dimensions can be provided on request.**

The set includes a seating fork

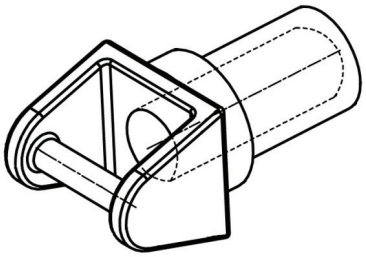

7. page 15

ACCESSORIES FOR THREE-SIDED TIPPER BEAMS

TT-number Complete set	TT-number Seat fork	TT-number Holder fork 1	TT-number Pin 1	TT-number Fork holder 2	TT-number Pin 2	TT-number Ring	TT-number Stabilizer
0711400.030	0711413.000	0711424.000	0711434.000	0711424.000	0711454.000	0711461.000	0711475.000
0711401.030						0711462.000	

** The fork is included in the set. Other components must be ordered.

0711411.000
Seat fork
Weight: 1.600 kg

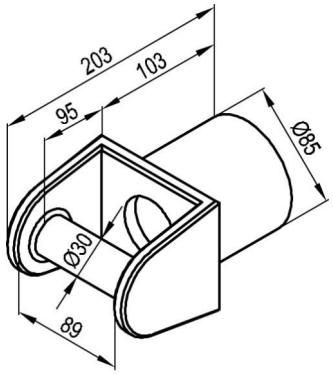

0711423.000
Fork holder, TYPE 1
Weight: 5.8 kg

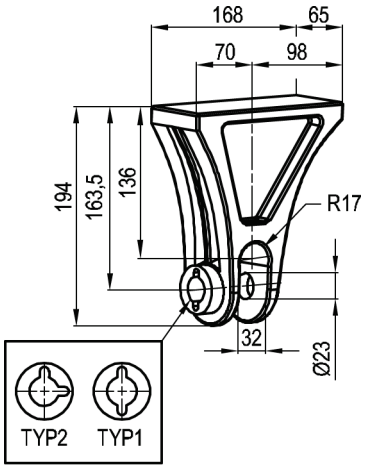

0711433.000
Pin TYPE 1
Weight: 0.4 kg

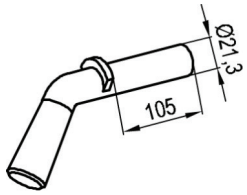

CZ +420 548 424 011 | info@trans-technik.cz | www.trans-technik.cz
SK +421 417 073 011 | trans-technik@trans-technik.sk | www.trans-technik.sk
RO +40 265 266 538 | contact@trans-technik.ro | www.trans-technik.ro
PL +48 438 434 050 | biuro@trans-technik.pl | www.trans-technik.pl

ACCESSORIES FOR THREE-SIDED TIPPER BEAMS FOR 20 t LOAD CAPACITY

0711413.000
Seating fork
Weight: 7.70 kg

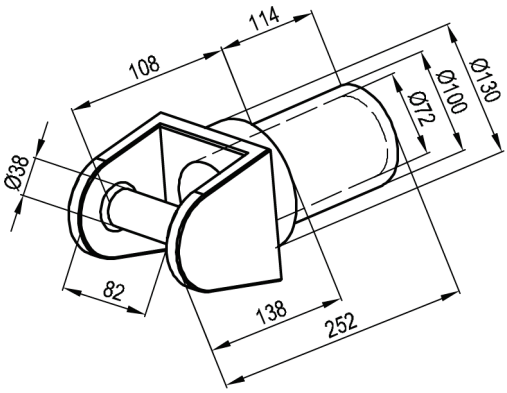

0711424.000
Fork holder
Weight: 4.80 kg

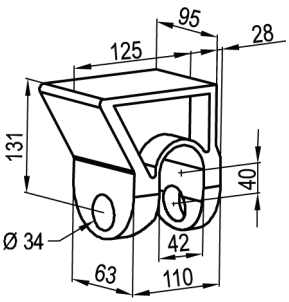

0711434.000
Pin TYPE 1
Weight: 0.4 kg

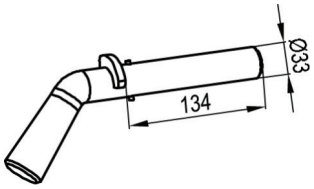

0711461.000
Ring
Weight: 0.025 kg

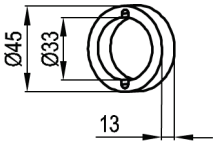

0711454.000 Pin TYPE 2
Weight: 0.4 kg

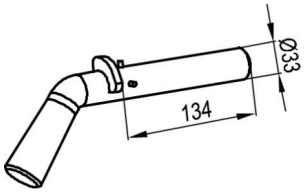

0711462.000
Ring
Weight: 0.025 kg

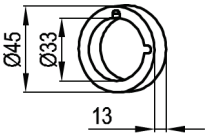

ACCESSORIES FOR THREE-SIDED TIPPER BEAMS FOR 45 t LOAD CAPACITY

0711414.000
Seating fork
Weight: 7.70 kg

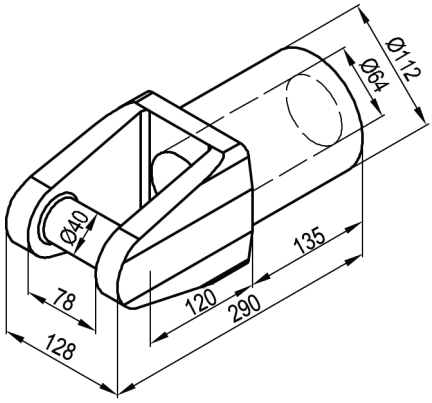

0711425.000
Fork holder
Weight: 4.80 kg

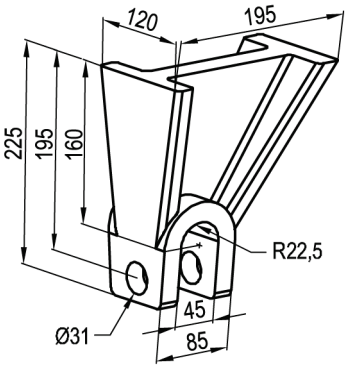

0711435.000
Pin TYPE 1
Weight: 1.0 kg

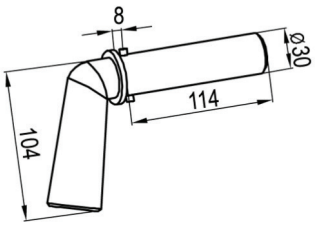

0711463.000
Ring
Weight: 0.03 kg

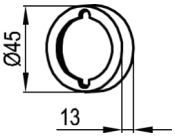

0711455.000
Pin TYPE 2
Weight: 1.0 kg

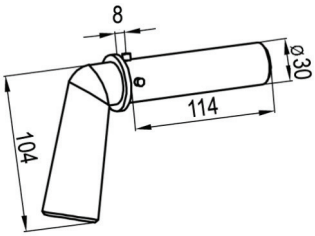

0711464.000
Ring
Weight: 0.03 kg

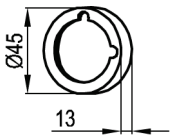

7. page 17

ACCESSORIES FOR THREE-SIDED TIPPER BEAMS - REAR STABILISERS

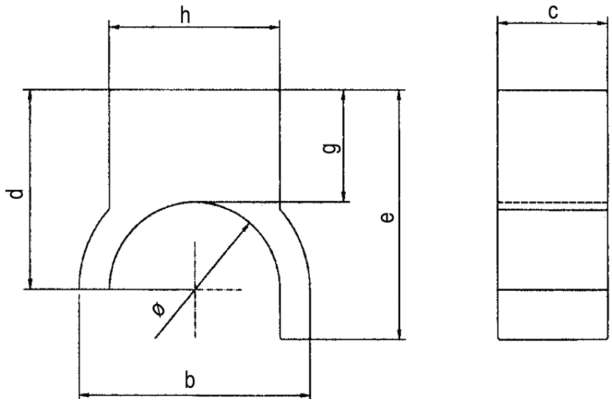

TT-number	Dimensions mm							Weight kg
	ø	b	c	d	e	g	h	
0711473.000	123	171	100	170	180	100	100	11.200
0711474.000	141	149	90	160	200	90	140	13.300
0711475.000	130	177	100	150	160	80	100	10.000
0711480.000	110	150	100	83	128	30	100	9.60

0711478.000
Rear stabiliser ø 127
Weight: 17.6 kg

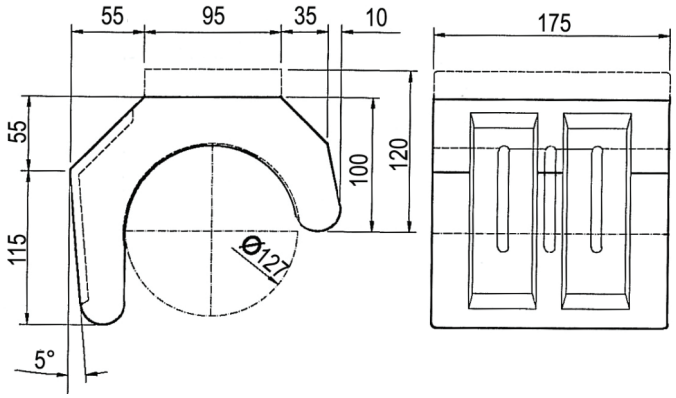

7. page 18

SEATING PLATE FOR TIPPER - SCREW-ON

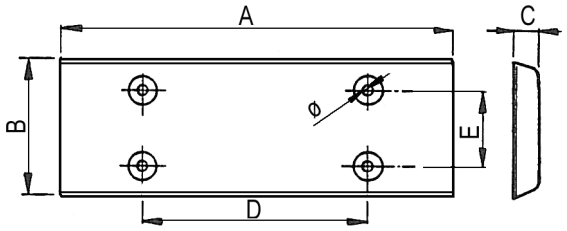

TT-number	Dimensions mm						Weight kg
	A	B	C	D	E	ø	
0714260.090	260	90	20	150	50	9	0.80

RUBBER SEAT PLATE FOR TIPPER - SCREW-ON

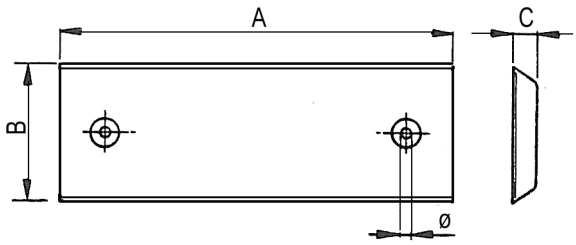

TT-number	Dimensions mm				Weight kg
	A	B	C	ø	
0714600.055	600	55	20	9	1.10

7. page 19

CZ +420 548 424 011 | info@trans-technik.cz | www.trans-technik.cz
SK +421 417 073 011 | trans-technik@trans-technik.sk | www.trans-technik.sk
RO +40 265 266 538 | contact@trans-technik.ro | www.trans-technik.ro
PL +48 438 434 050 | biuro@trans-technik.pl | www.trans-technik.pl

0712227.000
Hinge d = 16 mm, 90 x 40
Weight: 0.252 kg
Material Fe 360

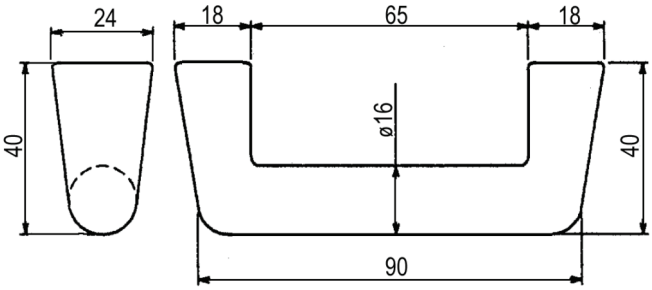

0712224.000
Hinge d = 22 mm, 90 x 55
Weight: 0.5 kg/pc
Material Fe 360

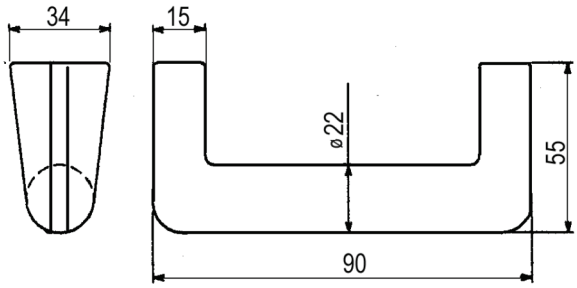

0712228.000
Hitch d = 20 mm
Weight: 0.282 kg
Material Fe 360

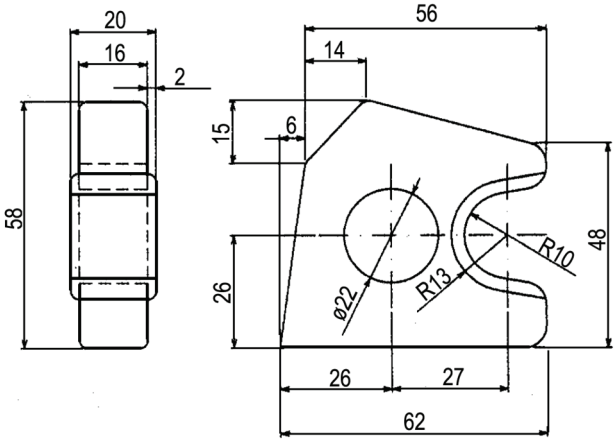

0712226.000
Hitch d = 23 mm
Weight: 0.25 kg
Material Fe 360

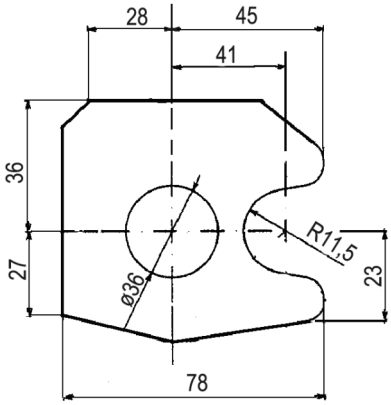

0712229.000
Hook d = 17 mm
Weight: 0.182 kg/pc
Material Fe 360

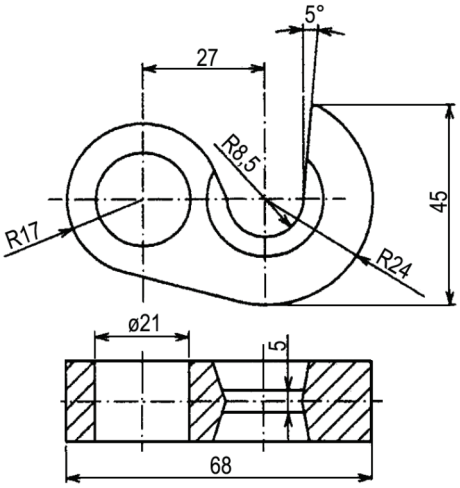

0712225.000
Hook d = 23 mm
Weight: 0.4 kg/pc
Material Fe 360

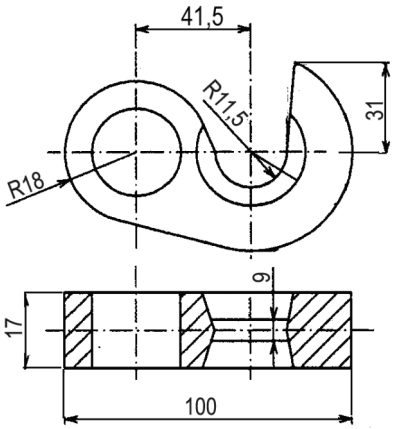

CZ +420 548 424 011 | info@trans-technik.cz | www.trans-technik.cz
SK +421 417 073 011 | trans-technik@trans-technik.sk | www.trans-technik.sk
RO +40 265 266 538 | contact@trans-technik.ro | www.trans-technik.ro
PL +48 438 434 050 | biuro@trans-technik.pl | www.trans-technik.pl

LOWER HINGES OPENABLE FOR AL SIDEBOARDS

0712601.000
Hinge pin

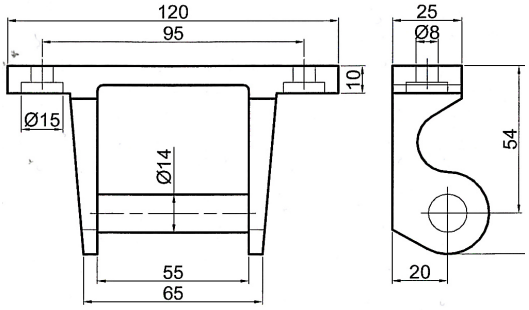

0712405.000
Sideboard pin
Weight: 0.3 kg

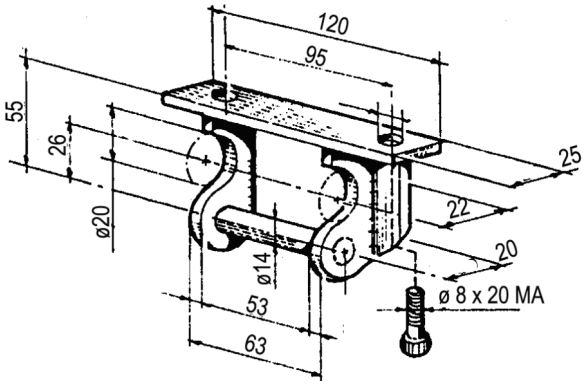

0712602.000
Pin hitch

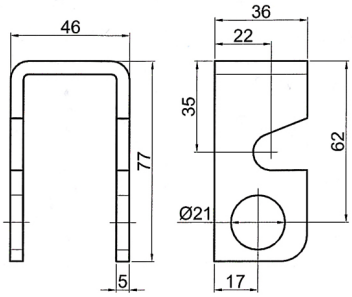

0712406.000
Sideboard hitch
Weight: 0.22 kg

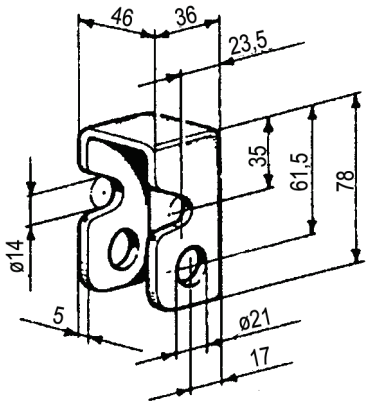

0712603.000
Threaded plate 120 x 18, 2xM8

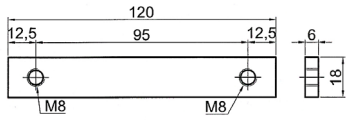

0712604.000
Hook diameter 30 mm

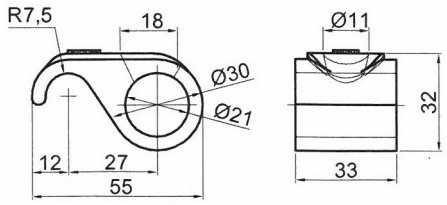

0712407.000
Lever 40 x 82
Weight: 0.2 kg

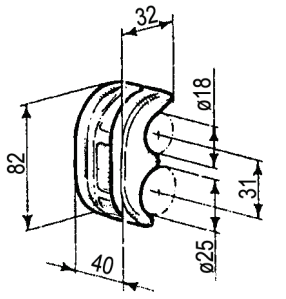

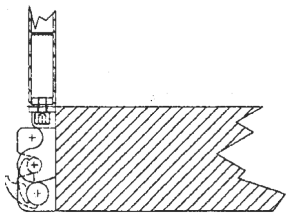

0712605.000
Pin hitch

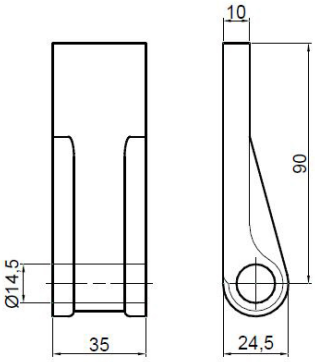

0712606.000
Hinge pin

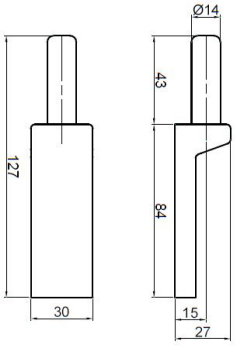

SIDEBOARD HINGES FOR TIPPER SUPERSTRUCTURES WITH BOTTOM TIPPING SIDEBOARDS.

0712021.000
Hinge pin
Weight: 0.535 kg

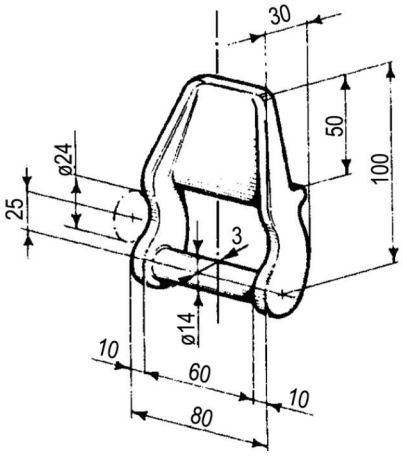

0712022.000
Hinge pin
Weight: 0.610 kg

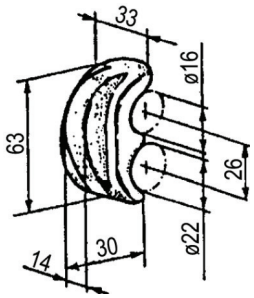

0712023.000
Hinge hitch
Weight: 0.450 kg

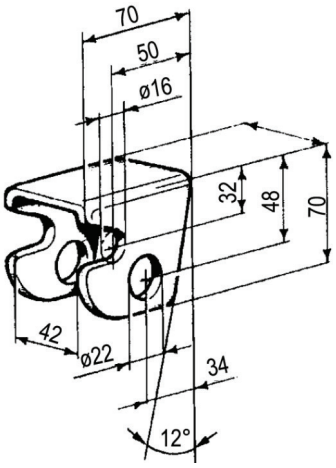

CZ +420 548 424 011 | info@trans-technik.cz | www.trans-technik.cz
SK +421 417 073 011 | trans-technik@trans-technik.sk | www.trans-technik.sk
RO +40 265 266 538 | contact@trans-technik.ro | www.trans-technik.ro
PL +48 438 434 050 | biuro@trans-technik.pl | www.trans-technik.pl

0712525.000
Pin d = 24 mm
Weight: 1.1 kg/pc

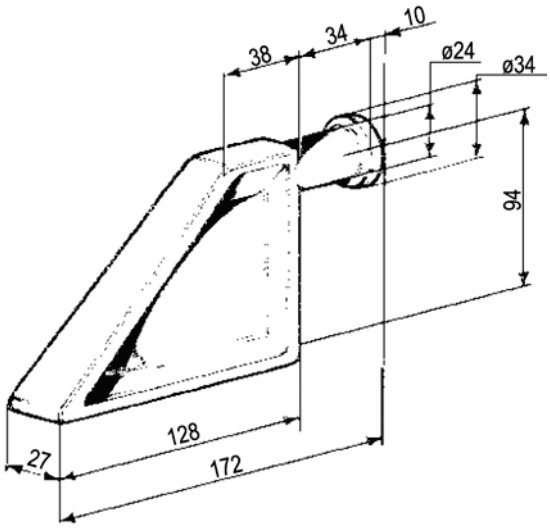

0712524.000
Pin hitch d = 26 mm
Weight: 0.5 kg/pc

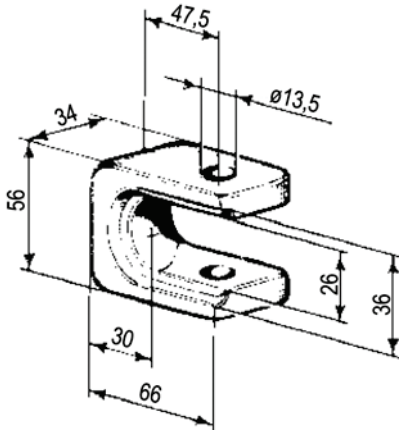

7. page 23

TT-number	Design	Weight kg/pc
0712083.000	Lever joint ø 20 mm	0.29
0712084.000	Lever joint ø 25 mm	0.29
0712085.000	Lever joint ø 30 mm	0.29
0712086.000	Lever joint ø 35 mm	0.29

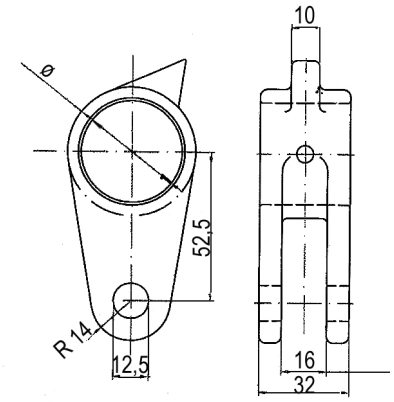

0712075.100
Control lever right
Weight: 1.7 kg/pc

0712075.200
Control lever left
Weight: 1.7 kg/pc

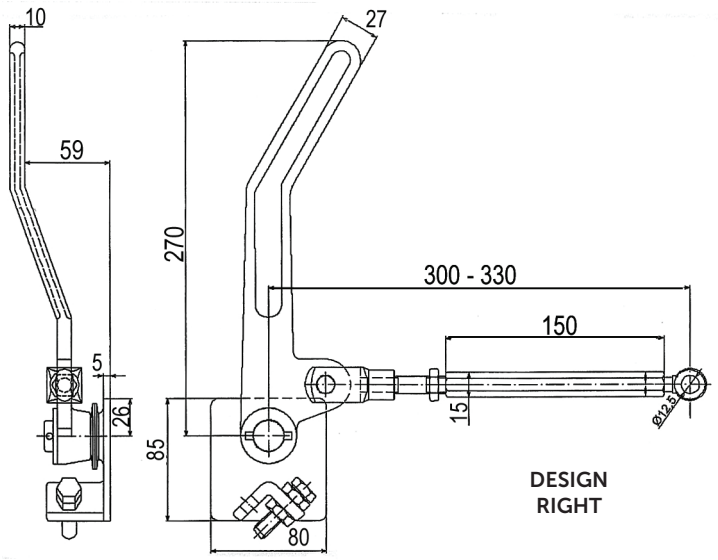

0712165.100
Steel sideboard latch with safety lock - right
Weight: 1.1 kg/pc

0712165.200
Steel sideboard latch with safety lock - left
Weight: 1.1 kg/pc

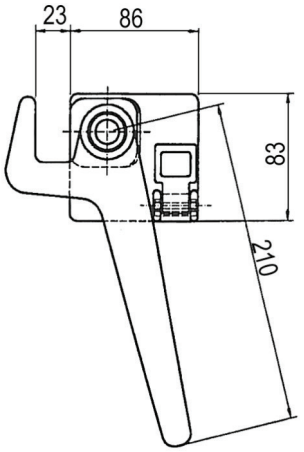

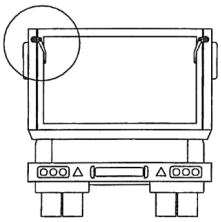

DESIGN
LEFT

0712166.100
Steel sideboard latch - right
Weight: 0.9 kg/pc

0712166.200
Steel sideboard latch - left
Weight: 0.9 kg/pc

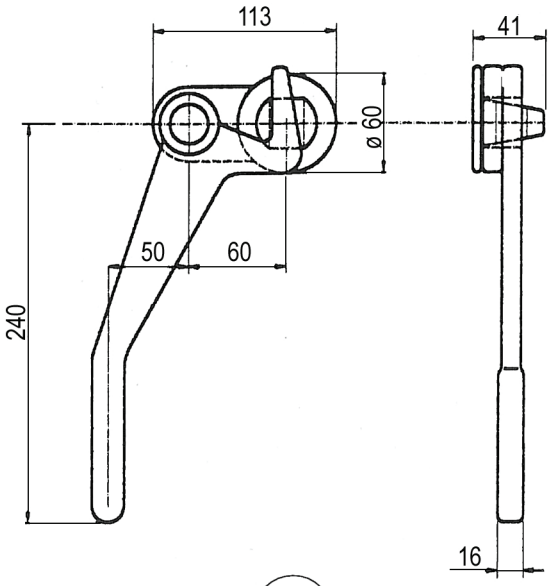

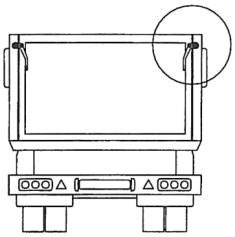

DESIGN
RIGHT

0712167.000
Counterpart to latch 0712166.xxx
Weight: 0.23 kg/pc

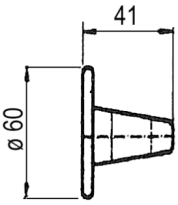

CZ +420 548 424 011 | info@trans-technik.cz | www.trans-technik.cz
SK +421 417 073 011 | trans-technik@trans-technik.sk | www.trans-technik.sk
RO +40 265 266 538 | contact@trans-technik.ro | www.trans-technik.ro
PL +48 438 434 050 | biuro@trans-technik.pl | www.trans-technik.pl

LATCH 603 FOR TIPPER SUPERSTRUCTURES

Designed for superstructures - as a corner or as a latch for bottom tipping.
Both the latch and the counterpart are screwed, the alternative - the anti-cap is welded.
The pictures show the left design.

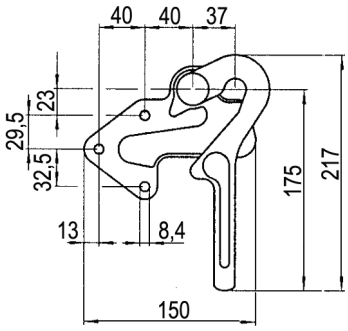

0712101.000
0712102.000

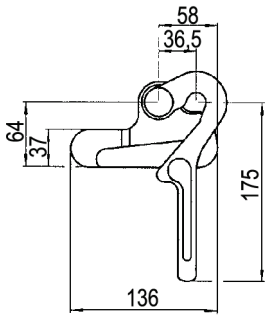

0712103.000
0712104.000

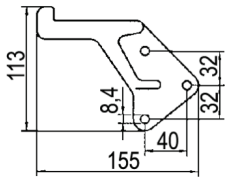

0712105.100
0712105.200

TT-number	Name	Weight kg
0712101.000	Hinged face latch 603 screw-in left - galvanized	0.8
0712102.000	Hinged face latch 603 right - galvanized	0.8
0712103.000	Hinged face latch 603, weld-on left - natural	0.78
0712104.000	Hinged face latch 603, weld-on right - natural	0.78
0712105.100	Latch counterpart 603 screw-in left - galvanized	0.41
0712105.200	Latch counterpart 603 screw-in right - galvanized	0.41

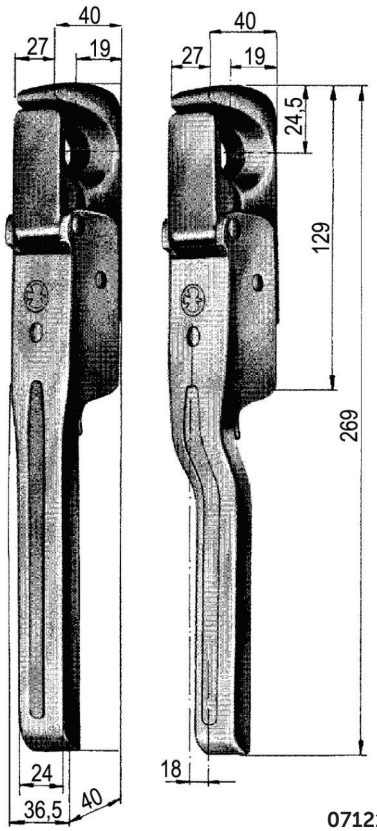

0712113.000

Latch 664 N for tipper superstructures with safety lock to prevent spontaneous opening.

TT-number	Name	Weight kg
0712111.000	Tipper latch 664 N straight	0.9
0712112.000	Tipper latch 664 N left	0.9
0712113.000	Tipper latch 664 N right	0.9
0712114.000	Pin for latch	0.3

DESIGN RIGHT

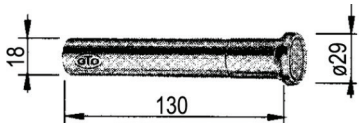

0712114.000

7. page 26

CZ +420 548 424 011 | info@trans-technik.cz | www.trans-technik.cz
SK +421 417 073 011 | trans-technik@trans-technik.sk | www.trans-technik.sk
RO +40 265 266 538 | contact@trans-technik.ro | www.trans-technik.ro
PL +48 438 434 050 | biuro@trans-technik.pl | www.trans-technik.pl

LATCH M50 FOR TIPPER SUPERSTRUCTURES WITH SAFETY LOCK TO PREVENT SPONTANEOUS OPENING. ALTERNATIVE TO LATCH 664 N

0712111.100
M50 straight tipper latch
Material: natural steel Fe 510
Weight: 0.92 kg/pc

0712112.100
M50 tipper latch left
Material: natural steel Fe 510
Weight: 0.92 kg/pc

0712113.100
M50 tipper latch right
Material: natural steel Fe 510
Weight: 0.92 kg/pc

0712114.100
Pin for latch
Material: natural steel Fe 510
Weight: 0.266 kg/pc

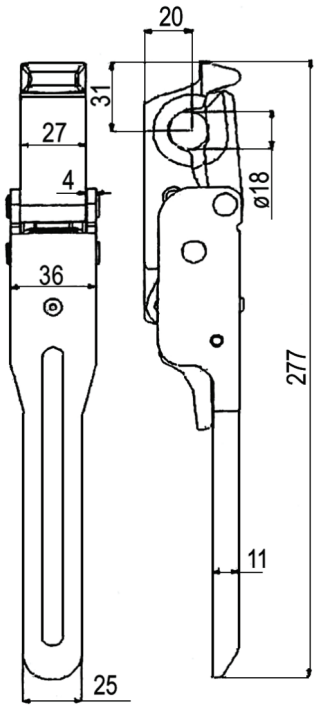

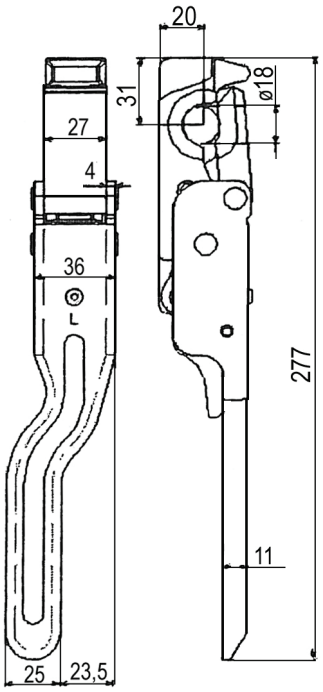

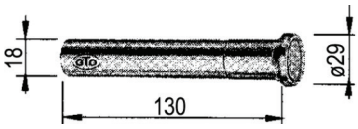

CZ +420 548 424 011 | info@trans-technik.cz | www.trans-technik.cz
SK +421 417 073 011 | trans-technik@trans-technik.sk | www.trans-technik.sk
RO +40 265 266 538 | contact@trans-technik.ro | www.trans-technik.ro
PL +48 438 434 050 | biuro@trans-technik.pl | www.trans-technik.pl

LATCH FOR TIPPER SUPERSTRUCTURES

Latch 662 N for tipper superstructures with automatic self-adjusting closing hook
The latch has a double-lock over the dead spot

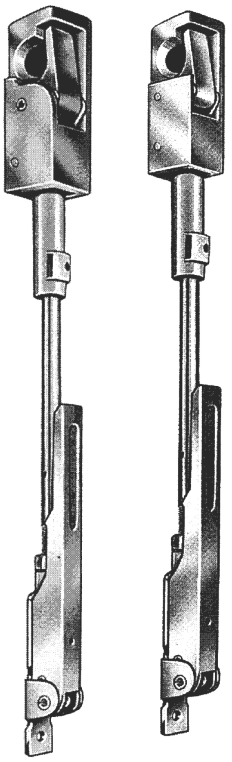

LATCH
RIGHT DESIGN

Latch 662 N short - for sideboards 600 - 800 mm Complete set	
TT-number	**Design**
0712131.000	With straight handle - right
0712132.000	With straight handle - left

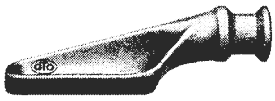

Pin - not included	
TT-number	Design
0712135.000	Right
0712136.000	Left

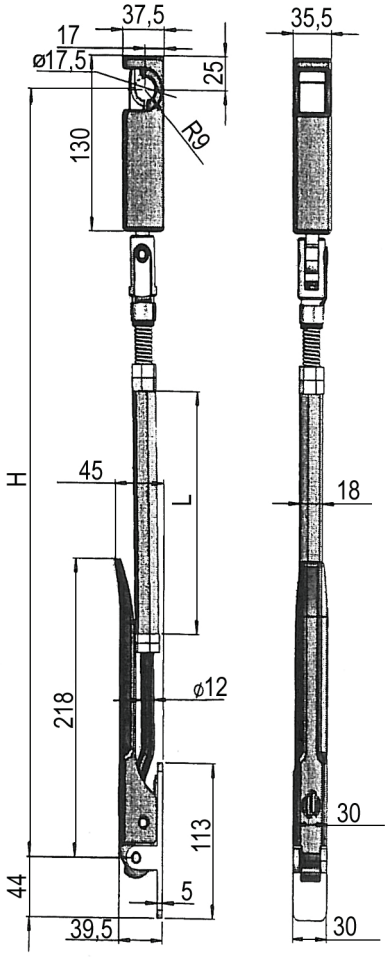

IT sideboard latch

- Designed for medium-sized tippers
- Easy maintenance and installation
- Design allows easier opening of the rear face

TT-number	Design	H mm	L mm	Weight kg/pc
0712180.100	Sideboard latch IT direct	500	90	2.20
0712181.100	Sideboard latch IT direct	600	190	2.45
0712182.100	Sideboard latch IT direct	800	390	2.96
0712183.100	Sideboard latch IT direct	1000	590	3.45

0712184.000
Pin ø 17 x 109 mm
Material: natural steel

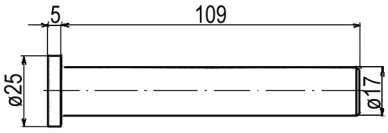

7. page 28

LATCH FOR TIPPER SUPERSTRUCTURES - H10 G

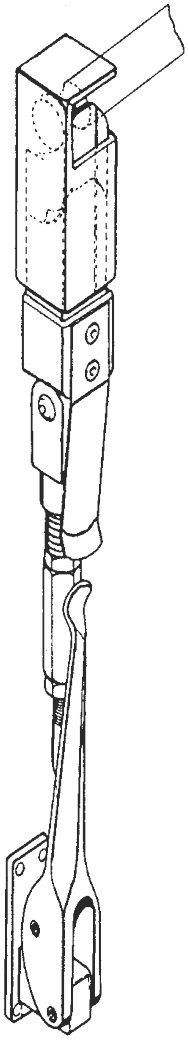

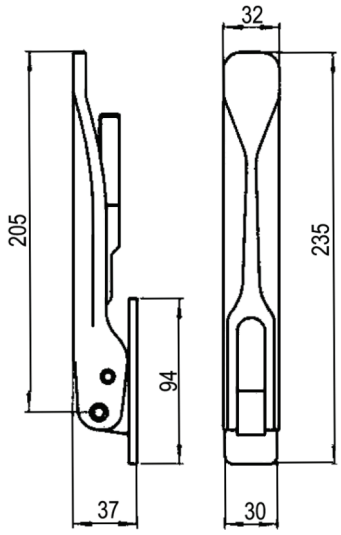

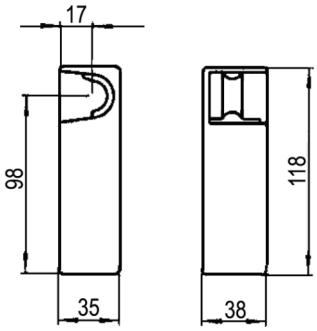

H10 G latch plug		
TT-number	**Design**	**Weight** kg
0712151.000	Sideboard left = right	0.75
0712151.001	rear left	0.75
0712151.002	rear right	0.75

H10 G / H11 latch rod		
TT-number	**Length** mm	**Weight** kg
0712154.055	55	0.09
0712154.120	120	0.22
0712154.180	180	0.36
0712154.240	240	0.51
0712154.300	300	0.66

H10 G / H11 latch lever	
TT-number	**Weight** kg
0712155.000	0.71

Pin bearing H10 G		
TT-number	**Design**	**Weight** kg
0712157.000	right	0.5
0712156.000	left	0.5

7. page 29

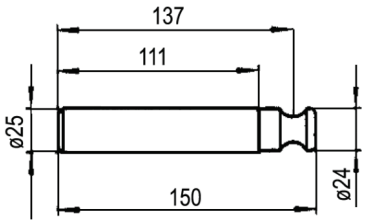

0712158.000
Straight pin 24x130 mm H10 G
Weight: 0.54 kg

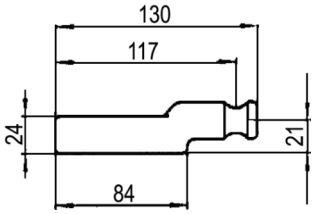

0712159.000
Straight pin 24x130 mm H10 G
Weight: 0.41 kg

LATCH FOR TIPPER SUPERSTRUCTURES - H11

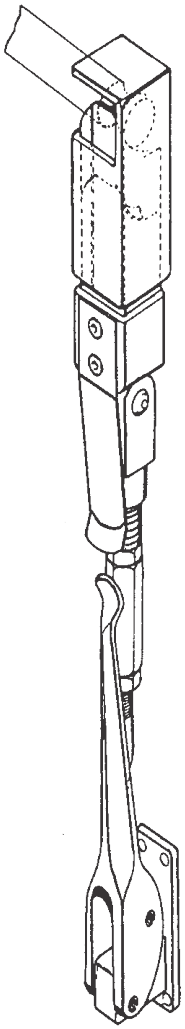

0712161.100

0712161.000

0712161.200

H11 latch plug		
TT-number	**Design**	**Weight** kg
0712160.000	Sideboard left = right	0.75
0712161.100	rear left	0.75
0712161.200	rear right	0.75

H10 G / H11 latch rod		
TT-number	**Length** mm	**Weight** kg
0712154.055	55	0.09
0712154.120	120	0.22
0712154.180	180	0.36
0712154.240	240	0.51
0712154.300	300	0.66

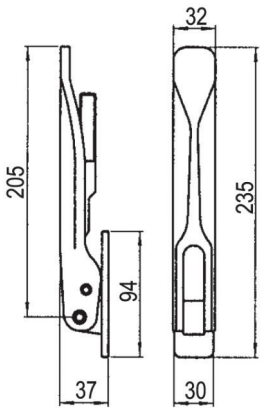

H10 G / H11 latch lever	
TT-number	**Weight** kg
0712155.000	0.71

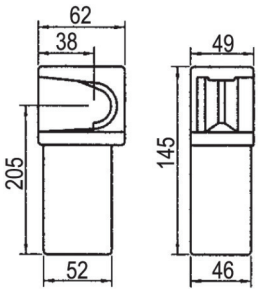

Pin bearing H11		
TT-number	**Design**	**Weight kg**
0712162.100	left	1.09
0712162.200	right	1.09

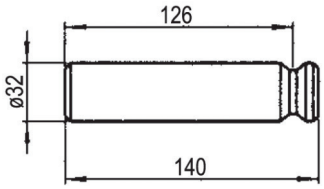

0712163.000
Straight pin 32x140 mm H11
Weight: 0.85 kg

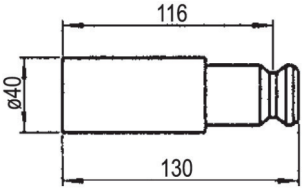

0712164.000
Straight pin 40 / 32 x 130 mm H11
Weight: 1.03 kg

0713004.000
Automatic rear face latch
For tippers up to 3.5 t
Weight: 1.460 kg/pc

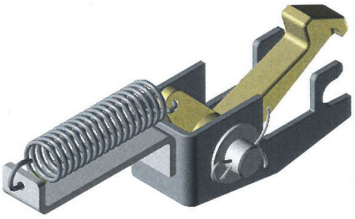

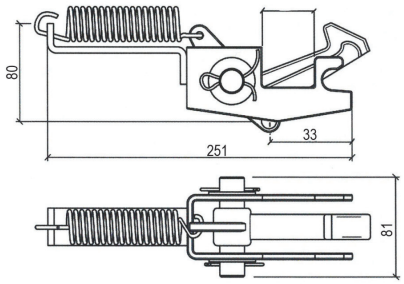

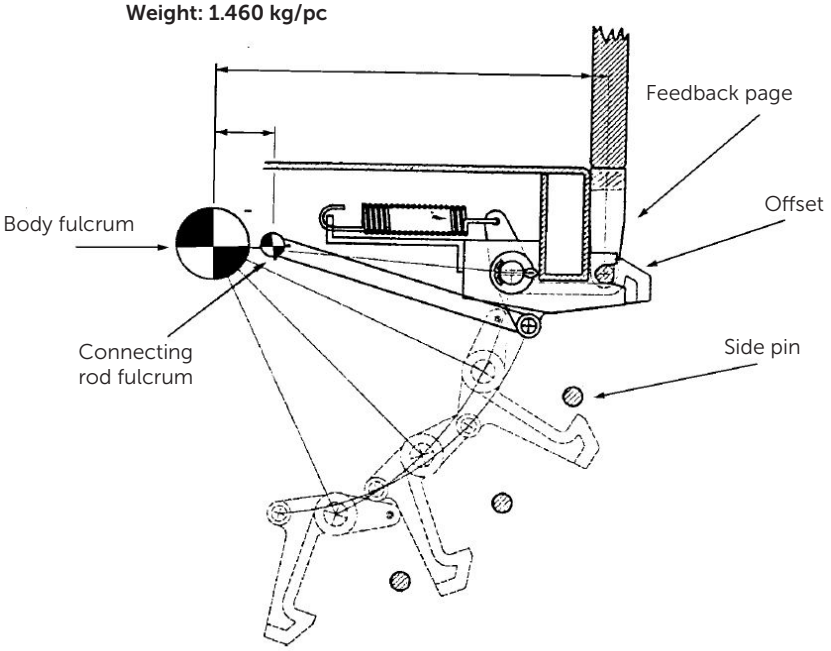

Pre-assembled mechanism for tilting - releasing - the rear tipper face, automatically operated during each rear tipping cycle, efficient and functional. Installation of this mechanism requires more time.

0713004.100
Latch counterpart
Weight: 0.26 kg/pc

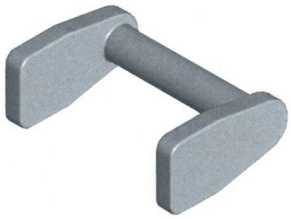

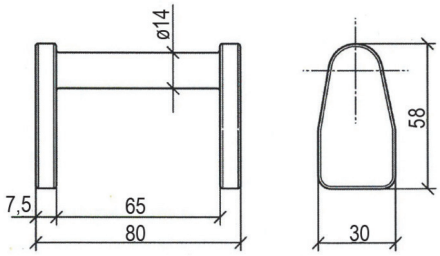

0713002.000
Automatic rear face latch
For tippers up to 19 t
Weight: 4.2 kg/pc

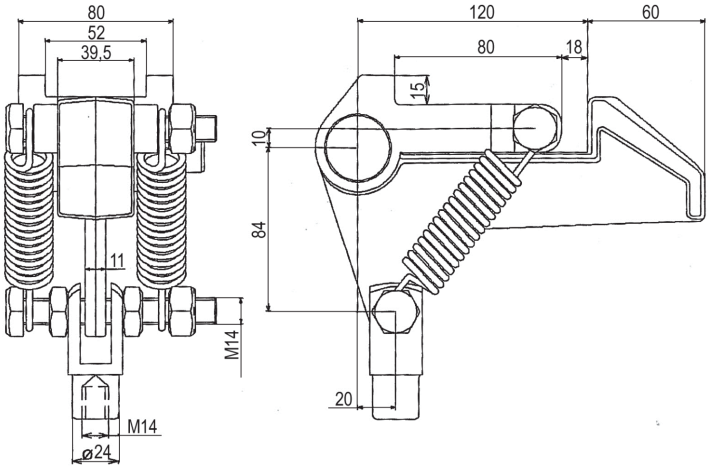

7. page 31

CZ +420 548 424 011 | info@trans-technik.cz | www.trans-technik.cz
SK +421 417 073 011 | trans-technik@trans-technik.sk | www.trans-technik.sk
RO +40 265 266 538 | contact@trans-technik.ro | www.trans-technik.ro
PL +48 438 434 050 | biuro@trans-technik.pl | www.trans-technik.pl

DETERMINATION OF DIMENSIONS AND TYPE OF HYDRAULIC CYLINDER

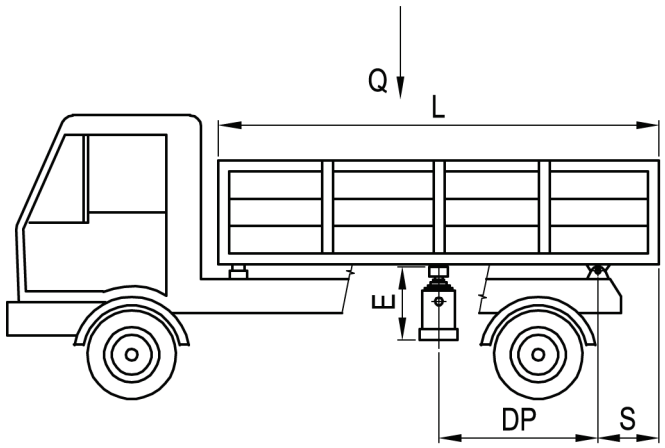

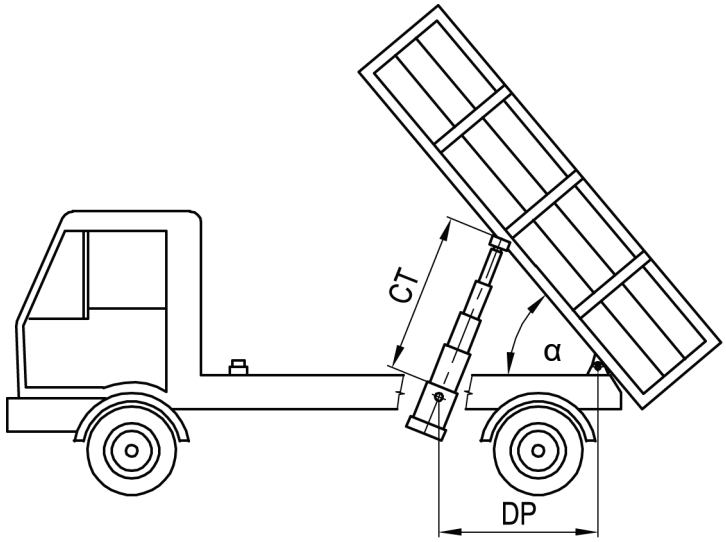

Dimension DP mm	CT cylinder stroke recommended angle α = 50°		
	45°	50°	55°
900	690	760	835
1000	765	845	925
1100	845	930	1020
1200	920	1015	1110
1300	995	1100	1205
1400	1075	1185	1295
1500	1150	1270	1390
1600	1225	1355	1480
1700	1300	1440	1575
1800	1380	1525	1665
1900	1455	1605	1760
2000	1530	1690	1850
2100	1610	1775	1945
2200	1685	1860	2035
2300	1760	1945	2130
2400	1840	2030	2220
2500	1915	2115	2315
2600	1990	2200	2405
2700	2065	2285	2500
2800	2145	2370	2590
2900	2220	2450	2685
3000	2300	2535	2775
3200	2450	2705	2960
3400	2605	2875	3145
3600	2755	3045	3330
3800	2910	3215	3515

7. page 32

Q load = weight of body + load [in tonnes]

α max. angle of tilting of the body (choose), recommended angle 50°

DP axial distance of the cylinder from the tipping axis [mm], estimate approx. **DP = (L / 2) - S (300)**

CT theoretical stroke of the cylinder [mm] - determine from the value of DP and angle **α** see table.

The actual stroke is always chosen larger with regard to the forces applied at the end position of the extended cylinder.

The angle **α** is determined by the setting of the limit switch

E the required approximate dimension of the cylinder when retracted

According to the values of Q, CT, E select the type of cylinder from the following tables.

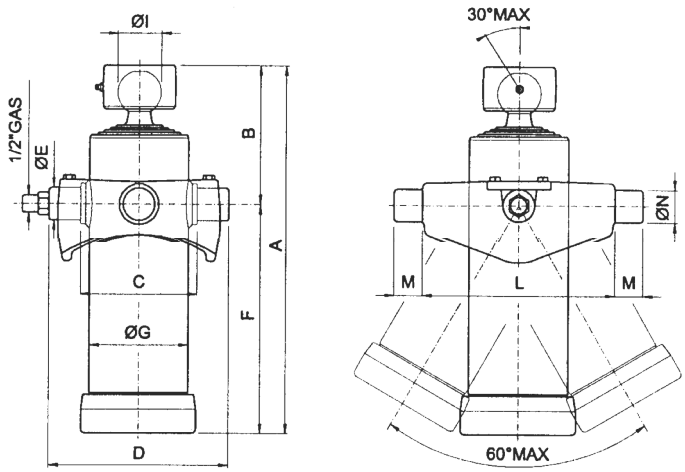

Working pressure 180 bar, max. working pressure 200 bar

Type of cylinder - order number	Stroke CT mm	Number of telescopes	Max. ball load (t)	Max. gimbal load (t)	Telescope diameter (mm)								Dimensions (mm)											Gimbal - size	Oil volume (dm3)	Weight (kg)
					32	45	60	75	90	105	120	140	A +5 -5	B	C	D	E	F	G	I	L	M	N			
					load in tonnes at 180 bar																					
					1	3	5	8	11	16	20	28														
0721053.306	530	3	14	10									328	168	148	228	40	160	110	55	230	40	40	3	2.7	19.9
0721071.304	700	3	8	-									382	153	118	198	40	229	95	45				-	2.4	17.4
0721120.305	1200	4	8	-									438	154	118	198	40	284	95	45				-	3.4	19.4
0721070.306	700	3	14	10									397	168	148	228	40	229	110	55	230	40	40	3	3.6	24.3
0721080.306	800	3	14	10									429	168	148	228	40	261	110	55	230	40	40	3	4.1	26.1
0721090.306	900	3	14	10									465	168	148	228	40	297	110	55	230	40	40	3	4.6	27.4
0721105.306	1050	3	14	10									533	168	148	228	40	365	110	55	230	40	40	3	5.4	31.4
0721111.306	1110	3	14	10									536	168	148	228	40	368	110	55	230	40	40	3	5.7	32.8
0721055.405	550	4	8	10									277	150	130	210	40	127	110	45	230	40	40	3	2.4	15.6
0721082.405	825	4	8	10									363	156	148	228	40	207	110	45	230	40	40	3	3.6	20.2
0721095.405	960	4	8	10									391	156	148	228	40	235	110	45	230	40	40	3	4.2	21.7
0721120.405	1200	4	8	10									453	156	148	228	40	297	110	45	230	40	40	3	5.2	25.4
0721120.505	1200	5	8	10									392	157	148	228	40	235	110	45	230	40	40	3	4.4	21.3

7. page 33

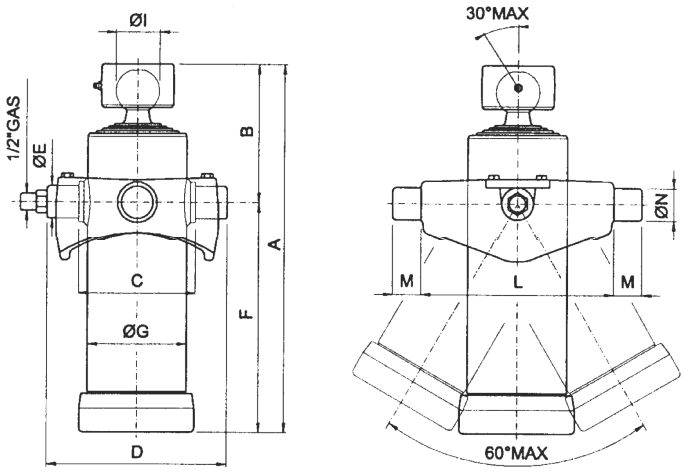

Working pressure 180 bar, max. working pressure 200 bar

Type of cylinder - order number	Stroke CT mm	Number of telescopes	Max. ball load (t)	Max. gimbal load (t)	Telescope diameter (mm)								Dimensions (mm)											Gimbal - size	Oil volume (dm3)	Weight (kg)
					32	45	60	75	90	105	120	140	A +5 -5	B	C	D	E	F	G	I	L	M	N			
					load in tonnes at 180 bar																					
					1	3	5	8	11.4	15.6	20.3	27.7														
0721100.309	900	3	14	10									478	164	148	228	40	314	125	55	230	40	40	3	7.5	27.5
0721128.309	1285	3	14	10									588	168	148	228	40	420	125	55	230	40	40	3	39.3	35.3
0721082.408	825	4	14	10									378	171	148	228	40	207	125	55	230	40	40	3	5.1	26.3
0721095.408	930	4	14	10									421	171	148	228	40	250	125	55	230	40	40	3	5.8	29.3
0721107.408	1070	4	14	10									453	171	148	228	40	282	125	55	230	40	40	3	6.7	31.9
0721135.408	1350	4	14	10									521	171	148	228	40	350	125	55	230	40	40	3	8.4	37.2
0721150.408	1500	4	14	10									530	171	148	228	40	359	125	55	230	40	40	3	9.4	40.3
0721170.408	1700	4	14	10									610	171	148	228	40	439	125	55	230	40	40	3	10.6	44.2
0721105.507	1050	5	8	10									366	159	148	228	40	207	125	45	230	40	40	3	5.7	24.5
0721120.507	1200	5	8	10									394	159	148	228	40	235	125	45	230	40	40	3	6.5	27.1
0721126.507	1260	5	8	10									409	159	148	228	40	250	12	45	230	40	40	3	6.8	27.8
0721146.507	1460	5	8	10									456	159	148	228	40	297	125	45	230	40	40	3	7.9	31.5
0721187.507	1875	5	8	10									548	159	148	228	40	389	125	45	230	40	40	3	10.1	37.6
0721116.606	1160	6	8	10									337	147	148	228	40	190	125	45	230	40	40	3	5.4	23.9
0721125.606	1250	6	8	10									367	160	148	228	40	207	125	45	230	40	40	3	5.8	24.2
0721142.606	1420	6	8	10									395	160	148	228	40	235	125	45	230	40	40	3	6.6	26.1
0721090.313	900	3	14	15									467	168	180	270	45	299	145	55	280	45	45	4	10.2	36.8
0721100.313	1000	3	14	15									503	168	180	270	45	335	145	55	280	45	45	4	11.3	39.8
0721100.414	1000	4	14	15									421	171	180	270	45	250	145	55	280	45	45	4	9.3	35.9

7. page 34

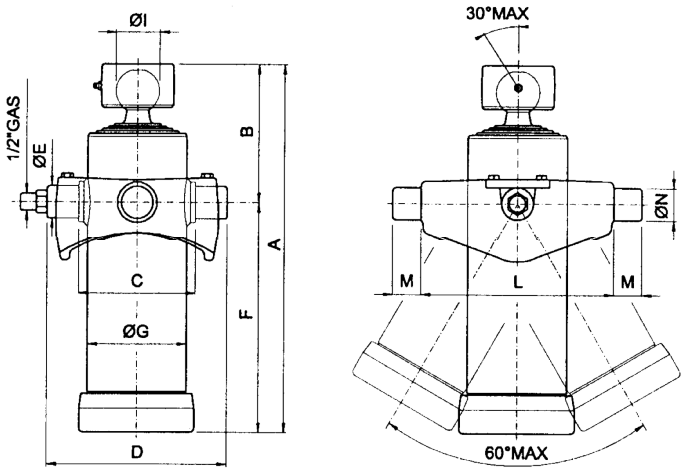

Working pressure 180 bar, max. working pressure 200 bar

Type of cylinder - order number	Stroke CT mm	Number of telescopes	Max. ball load (t)	Max. gimbal load (t)	Telescope diameter (mm)								Dimensions (mm)											Gimbal - size	Oil volume (dm3)	Weight (kg)
					32	45	60	75	90	105	120	140	A +5 -5	B	C	D	E	F	G	I	L	M	N			
					load in tonnes at 180 bar																					
					1	3	5	8	11.4	15.6	20.3	27.7														
0721200.411	2000	4	14	15									687	167	180	270	45	520	145	55	280	45	45	4	18	55
0721096.510	960	5	14	15									366	162	175	265	45	204	145	55	280	45	45	4	7.1	36
0721125.510	1250	5	14	15									424	174	180	270	45	250	145	55	280	45	45	4	9.3	41
0721150.510	1500	5	14	15									473	174	180	270	45	299	145	55	280	45	45	4	11.2	47
0721168.510	1680	5	14	15									529	174	180	270	45	355	145	55	280	45	45	4	12.5	50
0721187.510	1875	5	14	15									568	174	180	270	45	394	145	55	280	45	45	4	14	54
0721212.510	2125	5	14	15									618	174	180	270	45	444	145	55	280	45	45	4	15.8	59
0721250.510	2500	5	14	15									694	174	180	270	45	520	145	55	280	45	45	4	18.6	67
0721150.608	1500	6	8	15									412	162	180	270	45	250	145	45	280	45	45	4	9.8	40
0721120.415	1200	4	14	15									476	221	195	285	45	255	165	55	280	45	45	4	15.1	51
0721170.415	1700	4	14	15									611	167	195	285	45	444	165	55	280	45	45	5	21.4	62
0721200.415	2000	4	14	15									687	167	195	285	45	520	165	55	280	45	45	5	25.2	69
0721150.513	1500	5	14	15									489	220	195	285	45	269	165	55	280	45	45	5	16.1	52
0721187.513	1875	5	14	15									564	170	195	285	45	394	165	55	280	45	45	5	20.2	60
0721250.513	2500	5	14	15									690	170	195	285	45	520	165	55	280	45	45	5	26.9	74
0721150.612	1500	6	14	15									447	227	195	285	45	220	165	55	280	45	45	5	13.4	52
0721180.612	1800	6	14	15									496	227	195	285	45	269	165	55	280	45	45	5	15.1	58
0721225.612	2250	6	14	15									571	177	195	285	45	394	165	55	280	45	45	5	19.2	69
0721091.710	910	7	14	-									289	175	195	285	45	114	165	55	280	45	45	-	7.2	37

7. page 35

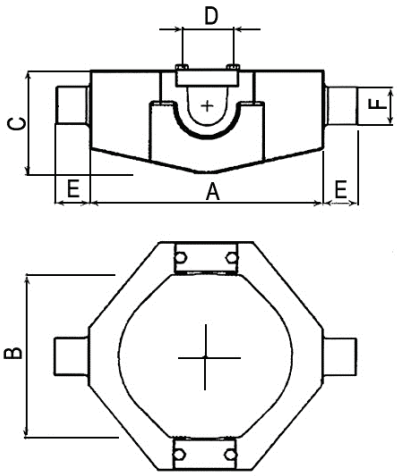

Gimbal

Size	TT-number	A	B	C	ø D	E	ø F	Weight kg
3	**0721000.301**	230	150	106	41	40	40	8.2
4	**0721000.401**	280	182	131	46	40	45	13.2
5	**0721000.501**	280	203	126	46	40	50	15.7

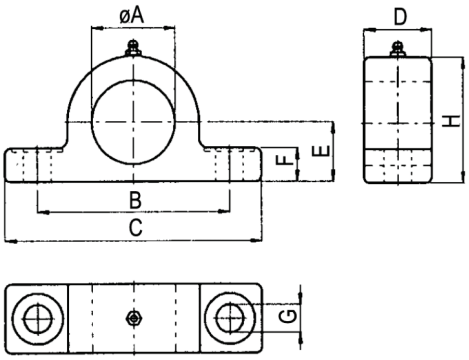

Screw-in bearing

TT-number	ø A	B	C	D	E	F	ø G	H	Weight kg
0721001.035	35.5	105	140	37	32	18	15	69	1.200
0721001.040	40.5								1.100
0721001.045	45.5								1.000
0721001.050	50.5								0.900

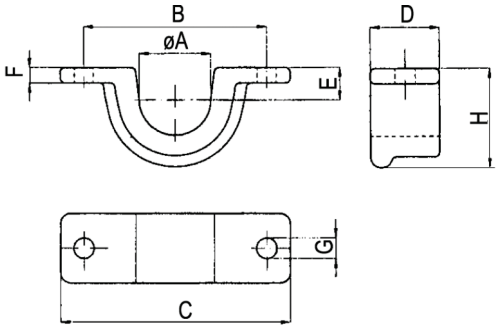

Welding bearing

TT-number	ø A	B	C	D	E	F	ø G	H	Weight kg
0721002.140	41	110	145	40	20	10	13	61	0.8
0721002.145	46	110	145	40	20	10	13	61	0.8
0721002.146	Bearing plate								0.3

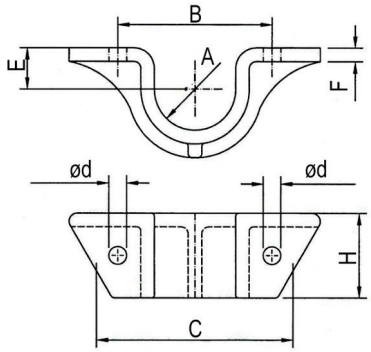

Welding bearing

TT-number	ø A	B	C		E	F	ø d	H	Weight kg
0721002.050	50	114	188		24.5	10	13	63	1.7
0721002.055	55		185		30			62	2.0
0721002.141	Bearing plate								0.67

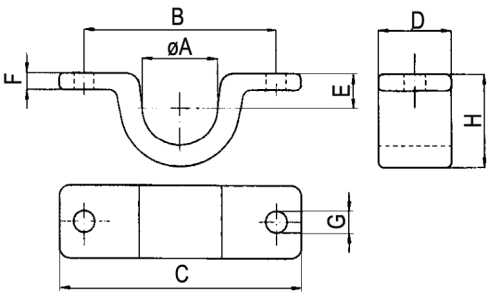

Welding bearing

TT-number	ø A	B	C	D	E	F	ø G	H	Weight kg
0721003.140	41	110	145	45	20	10	13	51	0.600
0721003.141	Bearing plate								0.4

7. page 36

CZ +420 548 424 011 | info@trans-technik.cz | www.trans-technik.cz
SK +421 417 073 011 | trans-technik@trans-technik.sk | www.trans-technik.sk
RO +40 265 266 538 | contact@trans-technik.ro | www.trans-technik.ro
PL +48 438 434 050 | biuro@trans-technik.pl | www.trans-technik.pl

HYDRAULIC TELESCOPIC CYLINDER - TYPE C

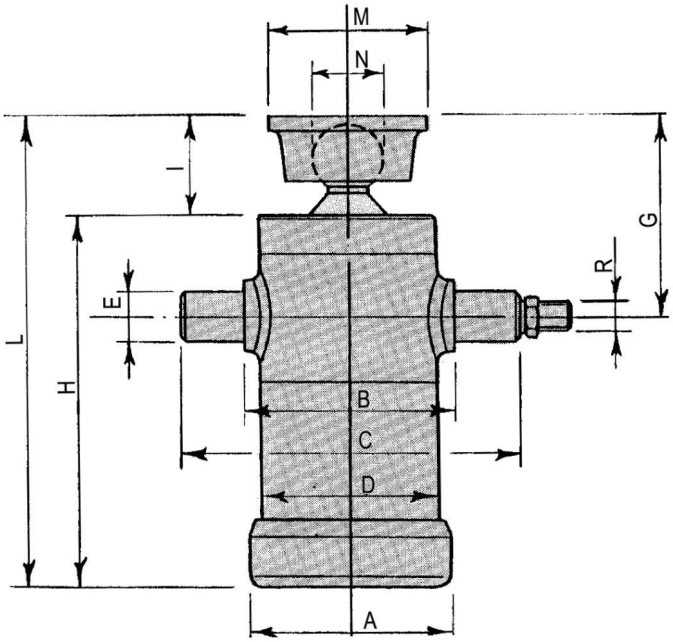

Stroke in kg for individual cylinders.

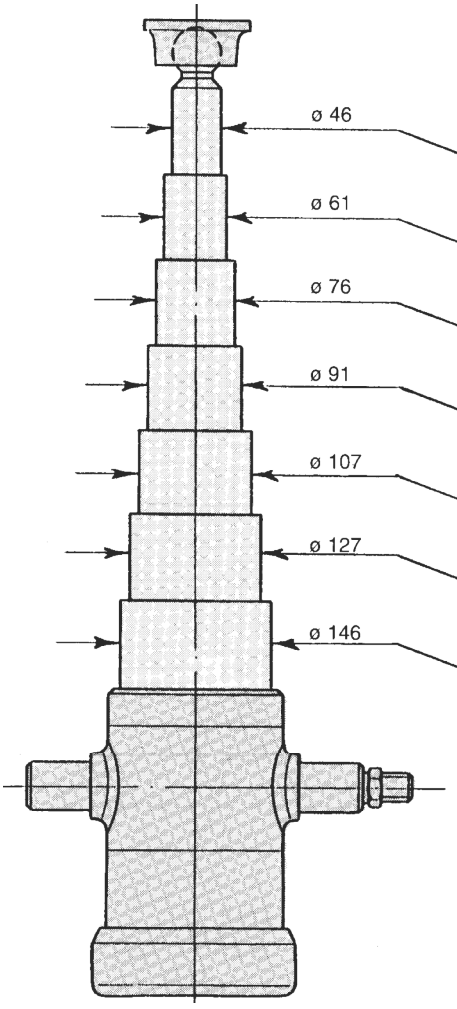

Operating pressure 160 bar, max. short-term load 180 bar.

Press. Bar	ø 146	ø 127	ø 107	ø 91	ø 76	ø 61	ø 46
100	16.730	12.660	8.980	6.500	4.530	2.920	1.660
125	20.910	15.820	11.230	8.120	5.660	3.650	2.070
160	26.770	20.250	14.370	10.400	7.250	4.670	2.650

HYDRAULIC TELESCOPIC CYLINDER - TYPE C

Technical specifications: chrome plunger; Working pressure: 160–210 bar

TT-number	Stroke	Number of telescopes	Telescope diameter (mm)							Load capacity kg at 100 bar	Cylinder dimensions (mm)												Weight (kg)	Cylinders (l)
			46	61	76	91	107	127	146		A	B	C	D	E	G	H	I	L	M	N	R		
0722050.203	500	2		x	x					3000	110	115	200	95	35	155	330	80	410	115	55	1/2"	18	2.4
0722060.203	600	2		x	x					3000	110	115	200	95	35	155	380	80	460	115	55	1/2"	20	2.8
0722070.203	700	2		x	x					3000	110	115	200	95	35	155	430	80	510	115	55	1/2"	22	3.2
0722050.303	500	3	x	x	x					3000	110	0115	200	95	35	145	245	70	315	100	45	1/2"	13	2.0
0722060.303	600	3	x	x	x					3000	110	0115	200	95	35	145	280	70	350	100	45	1/2"	14	2.4
0722070.303	700	3	x	x	x					3000	110	0115	200	95	35	145	315	70	385	100	45	1/2"	17	2.7
0722080.303	800	3	x	x	x					3000	110	0115	200	95	35	145	345	70	415	100	45	1/2"	18	3.1
0722090.303	900	3	x	x	x					3000	110	0115	200	95	35	145	378	70	448	100	45	1/2"	19	3.4
0722050.305	500	3		x	x	x				5000	130	135	220	114	35	155	245	80	325	115	55	1/2"	21	3.0
0722060.305	600	3		x	x	x				5000	130	135	220	114	35	155	280	80	360	115	55	1/2"	22	3.6
0722070.305	700	3		x	x	x				5000	130	135	220	114	35	155	315	80	395	115	55	1/2"	25	4.0
0722080.305	800	3		x	x	x				5000	130	135	220	114	35	155	345	80	425	115	55	1/2"	28	4.6
0722090.305	900	3		x	x	x				5000	130	135	220	114	35	155	380	80	460	115	55	1/2"	30	5.1
0722105.305	1050	3		x	x	x				5000	130	135	220	114	35	155	430	80	510	115	55	1/2"	33	5.9
0722115.305	1150	3		x	x	x				5000	130	135	220	114	35	155	465	80	545	115	55	1/2"	36	6.4
0722048.405	480	4	x	x	x	x				5000	130	135	220	114	35	145	200	70	270	100	45	1/2"	17	2.5
0722060.405	600	4	x	x	x	x				5000	130	135	220	114	35	145	230	70	300	100	45	1/2"	18	3.1
0722068.405	680	4	x	x	x	x				5000	130	135	220	114	35	145	250	70	320	100	45	1/2"	19	3.3
0722085.405	850	4	x	x	x	x				5000	130	135	220	114	35	145	290	70	360	100	45	1/2"	24	4.2
0722105.405	1050	4	x	x	x	x				5000	130	135	220	114	35	145	340	70	410	100	45	1/2"	28	5.1
0722060.408	600	4		x	x	x	x			8000	145	150	230	127	40	155	230	80	310	115	55	1/2"	24	4.5
0722068.408	680	4		x	x	x	x			8000	145	150	230	127	40	155	250	80	330	115	55	1/2"	26	5.0
0722085.408	850	4		x	x	x	x			8000	145	150	230	127	40	155	295	80	375	115	55	1/2"	29	6.1
0722095.408	950	4		x	x	x	x			8000	145	150	230	127	40	155	320	80	400	115	55	1/2"	31	6.8
0722105.408	1050	4		x	x	x	x			8000	145	150	230	127	40	155	345	80	425	115	55	1/2"	32	7.4
0722120.408	1200	4		x	x	x	x			8000	145	150	230	127	40	155	380	80	460	115	55	1/2"	35	8.4
0722130.408	1300	4		x	x	x	x			8000	145	150	230	127	40	155	405	80	485	115	55	1/2"	36	9.0
0722150.408	1500	4		x	x	x	x			8000	145	150	230	127	40	155	455	80	535	115	55	1/2"	38	10.3
0722170.408	1700	4		x	x	x	x			8000	145	150	230	127	40	155	505	80	585	115	55	1/2"	45	11.5
0722050.505	500	5	x	x	x	x	x			5000	145	150	230	127	40	145	180	70	250	100	45	1/2"	19	3.5
0722070.505	700	5	x	x	x	x	x			5000	145	150	230	127	40	145	220	70	290	100	45	1/2"	22	4.6
0722085.505	850	5	x	x	x	x	x			5000	145	150	230	127	40	145	250	70	320	100	45	1/2"	24	5.4
0722105.505	1050	5	x	x	x	x	x			5000	145	150	230	127	40	145	290	70	360	100	45	1/2"	26	6.3
0722115.505	1150	5	x	x	x	x	x			5000	145	150	230	127	40	155	311	70	381	100	45	1/2"	27	7.0
0722125.505	1250	5	x	x	x	x	x			5000	145	150	230	127	40	155	331	70	401	100	45	1/2"	29	7.6
0722100.505	1000	5		x	x	x	x	x		9000	170	175	265	152	45	155	295	80	375	115	55	1/2"	34	9.2
0722125.509	1250	5		x	x	x	x	x		9000	170	175	265	152	45	155	345	80	425	115	55	1/2"	46	11.2
0722150.505	1500	5		x	x	x	x	x		9000	170	175	265	152	45	155	395	80	475	115	55	1/2"	51	13.1
0722185.505	1850	5		x	x	x	x	x		9000	170	175	265	152	45	155	465	80	545	115	55	1/2"	59	15.9
0722215.505	2150	5		x	x	x	x	x		9000	170	175	265	152	45	155	525	80	605	115	55	1/2"	62	18.3
0722150.610	1500	6		x	x	x	x	x	x	10000	195	200	290	168	50	200	350	80	430	115	55	3/4"	57	16.4
0722190.610	1900	6		x	x	x	x	x	x	10000	195	200	290	168	50	200	420	80	500	115	55	3/4"	66	20.2
0722230.610	2300	6		x	x	x	x	x	x	10000	195	200	290	168	50	200	485	80	565	115	55	3/4"	75	24.1
0722260.610	2600	6		x	x	x	x	x	x	10000	195	200	290	168	50	200	535	80	615	115	55	3/4"	81	26.9
0722100.512	1000	5			x	x	x	x	x	12000	195	200	290	168	50	200	300	80	380	115	55	3/4"	45	12.6
0722125.512	1250	5			x	x	x	x	x	12000	195	200	290	168	50	200	350	80	430	115	55	3/4"	55	15.4
0722150.512	1500	5			x	x	x	x	x	12000	195	200	290	168	50	200	400	80	480	115	55	3/4"	56	18.1
0722185.512	1850	5			x	x	x	x	x	12000	195	200	290	168	50	200	470	80	550	115	55	3/4"	64	21.8
0722215.512	2150	5			x	x	x	x	x	12000	195	200	290	168	50	200	530	80	610	115	55	3/4"	71	25.1

7. page 38

HYDRAULIC TELESCOPIC CYLINDER - TYPE C - GIMBALS AND BEARINGS

Bearing for three-sided cylinder movement (gimbal).
Without coating. In case of interest it is possible to deliver also galvanized variant.

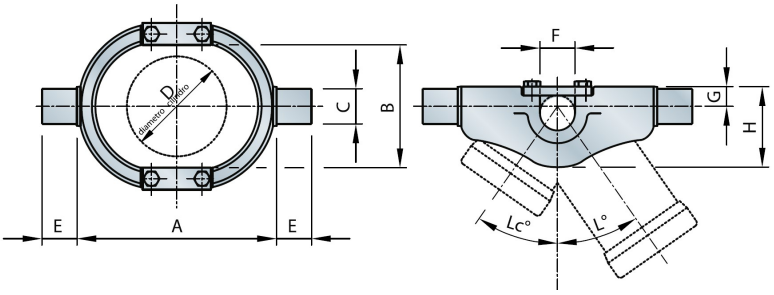

TT-number	A	B	C	D	E	F	G	H	L	Lc	Weight kg
0722 000.095	200	120	ø 35	ø 95	35	ø 35	25	77	35°	27°	5,5
0722 000.114	230	140	ø 40	ø 114	40	ø 35	27	90	35°	30°	8
0722 000.127	230	155	ø 40	ø 127	40	ø 40	29	110	32°	28°	9,5
0722 000.152	280	180	ø 50	ø 152	40	ø 45	45	120	32°	28°	13,5
0722 000.168	320	200	ø 50	ø 168	45	ø 50	50	140	31°	25°	23
0722 000.193	390	235	ø 50	ø 193	52	ø 50	67	185	32°	29°	29,5

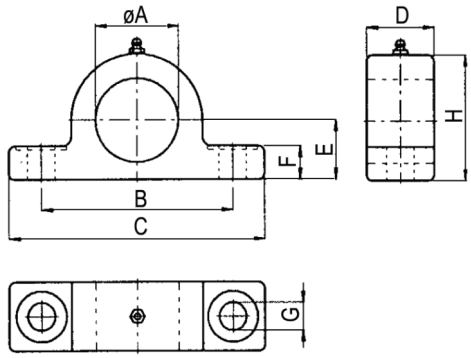

Screw-in bearing

TT-number	ø A	B	C	D	E	F	ø G	H	Weight kg
0721001.035	35.5	105	140	37	32	18	15	69	1.200
0721001.040	40.5								1.100
0721001.045	45.5								1.000
0721001.050	50.5								0.900

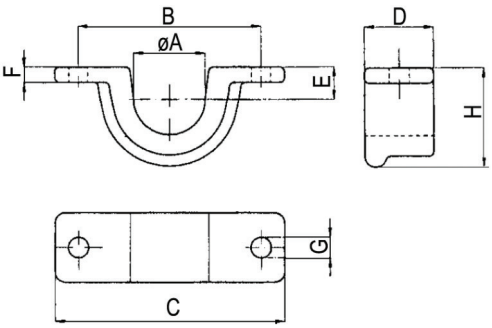

Welding bearing

TT-number	ø A	B	C	D	E	F	ø G	H	Weight kg
0721002.140	41	110	145	40	20	10	13	61	0.8
0721002.145	46	110	145	40	20	10	13	61	0.8
0721002.146	Bearing plate								0.3

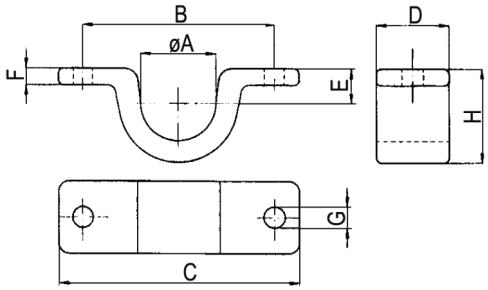

Welding bearing

TT-number	ø A	B	C	D	E	F	ø G	H	Weight kg
0721003.140	41	110	145	45	20	10	13	51	0.600
0721003.141	Bearing plate								0.4

7. page 39

DOUBLE ACTING HYDRAULIC CYLINDERS - TYPE F

Technical specifications
Piston: chrome-plated UNI 5332 C45
Working pressure: 160–210 bar
Operating temperature range: -30 to 110°

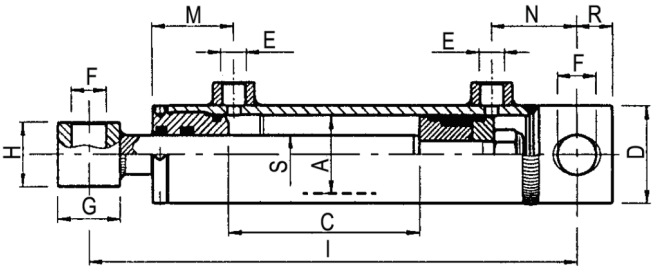

TT-number	A	S	C	I	kg	D	E	F	G	H	M	A	R	kg / 100 bar
0726032.005	ø 32 H9	ø 20	50	205	2	ø 40	1/4"	ø 16.4	ø 28	35	43	38	17	800
0726032.010			100	255	2.5									
0726032.015			150	305	3									
0726032.020			200	355	3									
0726032.025			250	405	3.5									
0726032.030			300	455	3.5									
0726040.010	ø 40 H9	ø 25	100	270	3.5	ø 50	3/8"	ø 20.5	ø 35	40	43	45	19	1250
0726040.015			150	320	4									
0726040.020			200	370	4.5									
0726040.025			250	420	5									
0726040.030			300	470	5.5									
0726040.040			400	570	6.5									
0726040.050			500	670	7.5									
0726040.060			600	770	8.5									
0726040.070			700	870	9									
0726040.080			800	970	10									
0726050.010	ø 50 H9	ø 30	100	300	5.5	ø 60	3/8"	ø 25.5	ø 45	45	46	58	25	1960
0726050.015			150	350	6									
0726050.020			200	400	6.5									
0726050.025			250	450	7.5									
0726050.030			300	500	8									
0726050.040			400	600	9									
0726050.050			500	700	10.5									
0726050.060			600	800	11.5									
0726050.070			700	900	13									
0726050.080			800	1000	14									

7. page 40

DOUBLE ACTING HYDRAULIC CYLINDERS - TYPE F

Technical specifications:
Piston: chrome-plated UNI 5332 C45
Working pressure: 160–210 bar
Operating temperature range: -30 to 110°

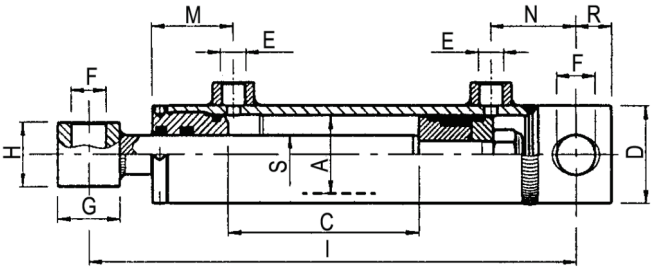

TT-number	A	S	C	I	kg	D	E	F	G	H	M	A	R	kg / 100 bar
0726060.010			100	300	6.5									
0726060.015			150	350	7.5									
0726060.020			200	400	8									
0726060.025			250	450	8.5									
0726060.030			300	500	9.5									
0726060.035	⌀ 60 H9	⌀ 30	350	550	10	⌀ 70	3/8"	⌀ 25.5	⌀ 45	45	51	58	25	2820
0726060.040			400	600	11									
0726060.045			450	650	11.5									
0726060.050			500	700	12									
0726060.060			600	800	13.5									
0726060.070			700	900	15									
0726070.020			200	410	11									
0726070.025			250	460	11.5									
0726070.030			300	510	12.5									
0726070.035			350	560	13.5									
0726070.040	⌀ 70 H9	⌀ 40	400	610	14.5	⌀ 80	3/8"	⌀ 30.5	⌀ 54	55	51	58	25	3840
0726070.045			450	660	15.5									
0726070.050			500	710	16.5									
0726070.060			600	810	18.5									
0726070.070			700	910	20.5									
0726080.020			200	410	14.5									
0726080.025			250	460	15.5									
0726080.030			300	510	17									
0726080.035	⌀ 80 H9	⌀ 40	350	560	18	⌀ 92	3/8"	⌀ 30.5	⌀ 54	55	62	58	25	5020
0726080.040			400	610	19									
0726080.050			500	710	21.5									
0726080.060			600	810	23.5									
0726080.070			700	910	26									
0726100.030			300	545	29									
0726100.040			400	645	32.5									
0726100.050	⌀ 100 H9	⌀ 50	500	745	36	⌀ 115	3/8"	⌀ 30.5	⌀ 54	70	81	60	34	7850
0726100.070			700	945	43									
0726100.090			900	1145	50									
0726120.050	⌀ 120 H9	⌀ 60	500	770	62	⌀ 140	1/2"	⌀ 40.5	⌀ 70	80	81	65	40	11300
0726120.050	⌀ 120 H9		1000	1270	93.5									

7. page 41

Hydraulic circuit diagram of the electro-hydraulic pump

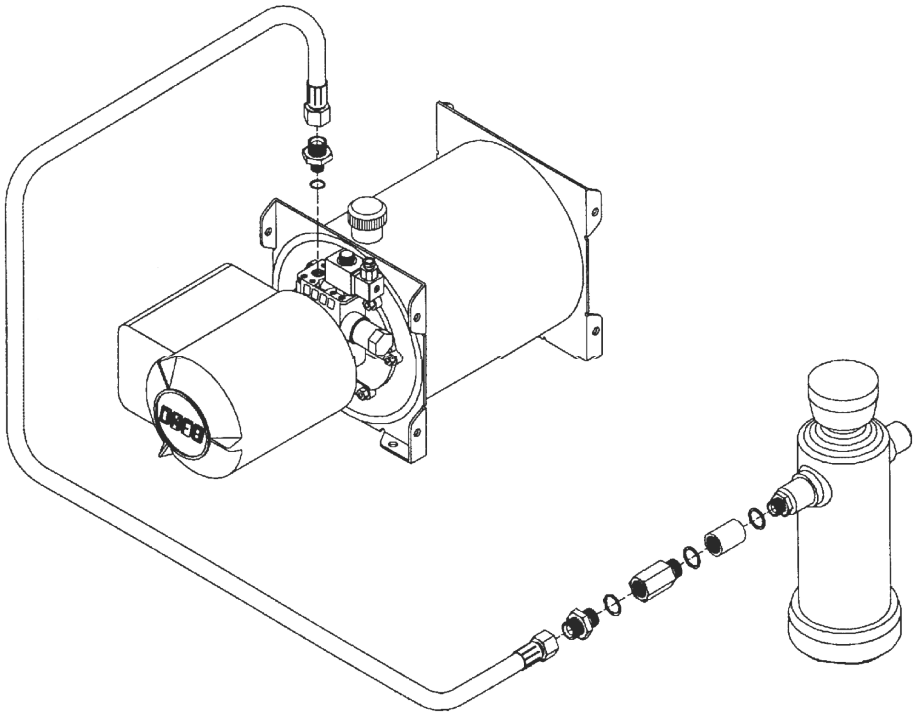

Electrical wiring diagram of the electro-hydraulic pump

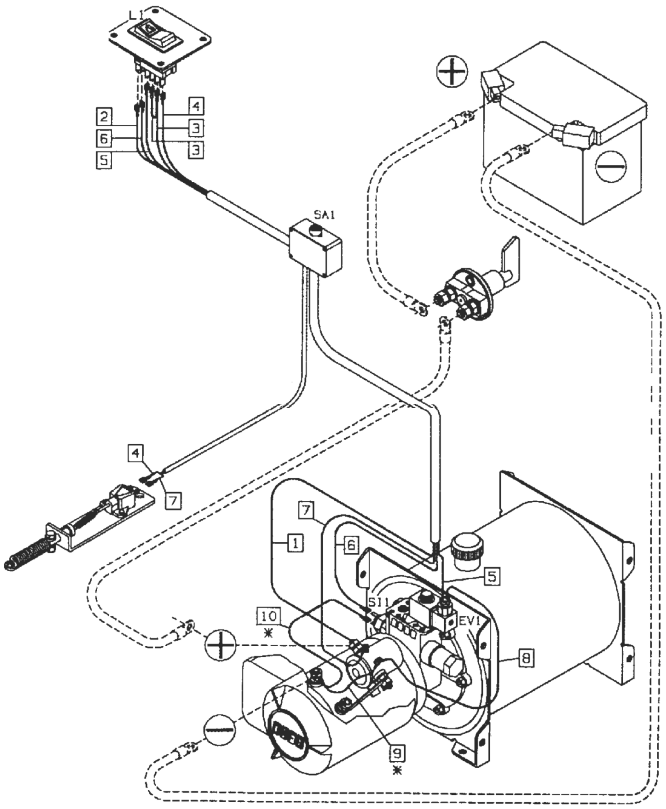

7. page 42

Type RE
Electro-hydraulic pump with 12 or 24V DC motor, **type RE for single cylinder**

To determine the type of electro-hydraulic unit, we need to know the cylinder:

- cylinder volume Vv = quantity of oil (dm3 = litre)
- the load of the individual cylinder stages
- cylinder working pressure
- the required lifting (tipping) capacity

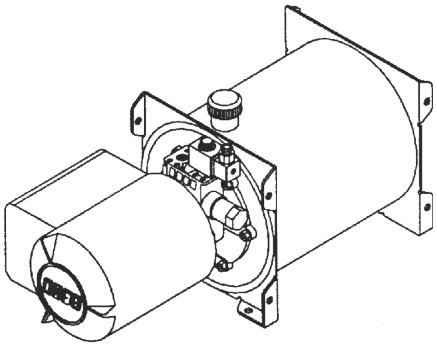

Design procedure of electro-hydraulic aggregate:

1. I choose a hydraulic cylinder (pressure required, volume Vv = [litre]).
2. Volume of the aggregate tank Vn = 1.5 - 2 Vv.
3. Choose the pump Q so that the hydraulic cylinder is completely filled in about 0.5 - 1 min.
4. From the tables A, B, C and D check the applicability of the aggregate to the selected cylinder.

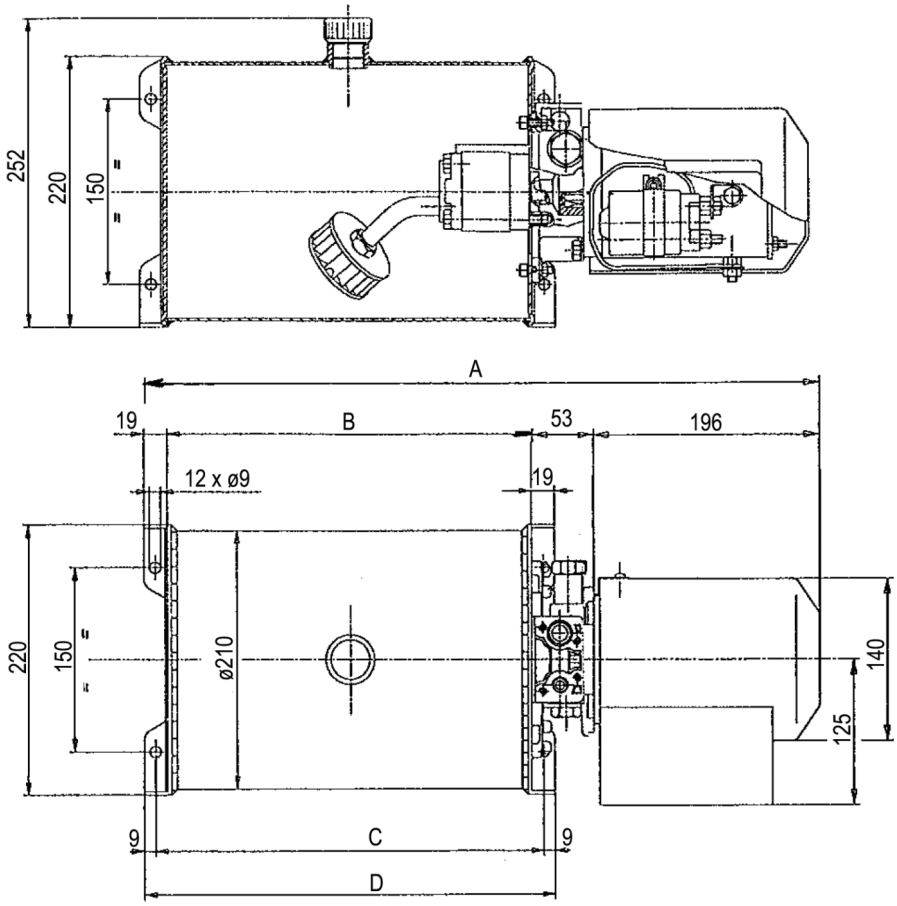

Type	Tank volume litre	Dimensions mm			
		A	B	C	D
S7 - Ac	7	480	212	232	250
S10 - Ac	10	570	302	322	340
S15 - Ac	15	720	452	472	490

7. page 43

TYPE RE
Stroke and pressure charts for 12 VOLT / 2000 WATT pump

Dependence of oil delivery (l/min.) on pressure
for individual pump types

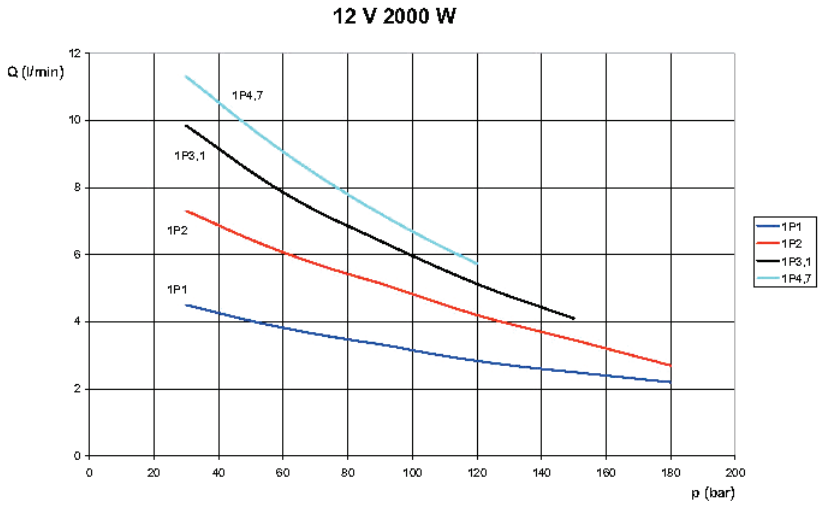

Dependence of current draw on oil pressure

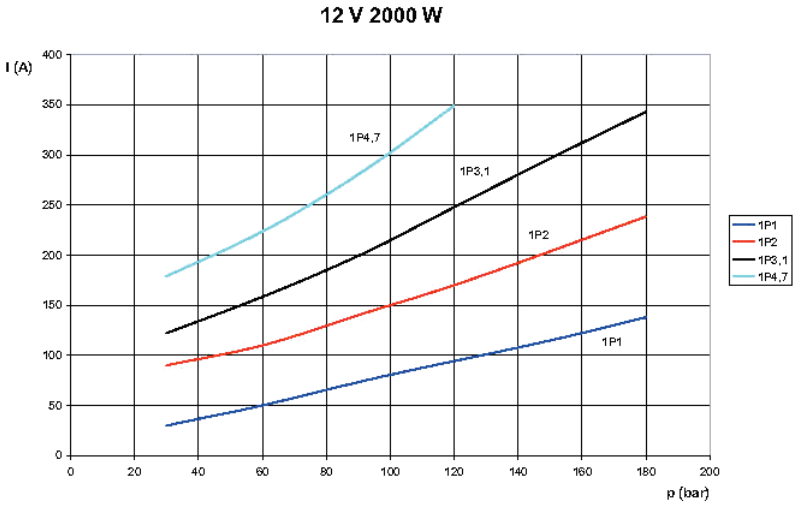

The values of the graphs are variable, they are set in terms of:
ambient temperature 20°C, oil viscosity 4°E / 50°C, DC current 12

CZ +420 548 424 011 | info@trans-technik.cz | www.trans-technik.cz
SK +421 417 073 011 | trans-technik@trans-technik.sk | www.trans-technik.sk
RO +40 265 266 538 | contact@trans-technik.ro | www.trans-technik.ro
PL +48 438 434 050 | biuro@trans-technik.pl | www.trans-technik.pl

TYPE RE
Stroke and pressure charts for 24 VOLT / 3000 WATT pump

Dependence of oil delivery (l/min.) on pressure
for individual pump types

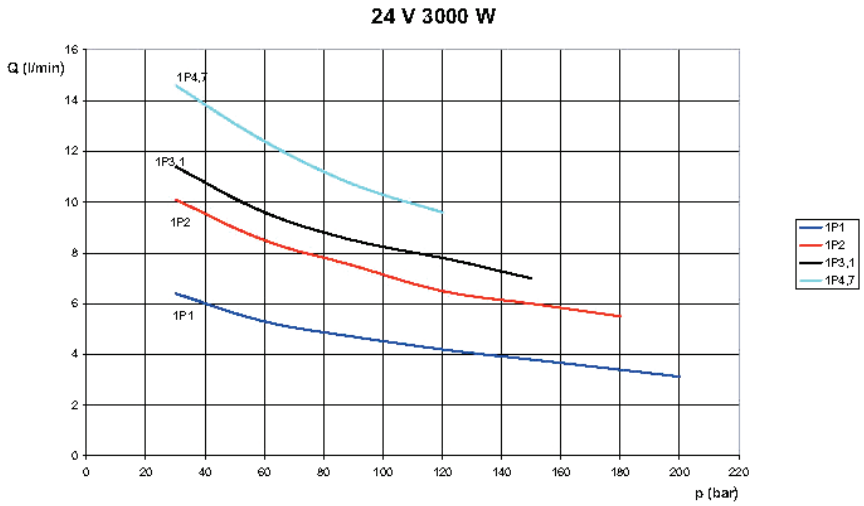

Dependence of current draw on oil pressure

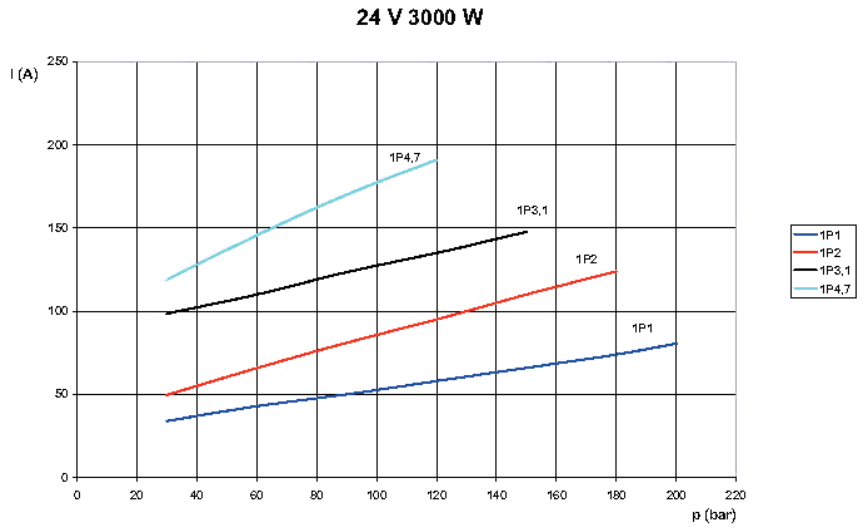

The values of the graphs are variable, they are set in terms of:
ambient temperature 20°C, oil viscosity 4°E / 50°C, DC current 12

CZ +420 548 424 011 | info@trans-technik.cz | www.trans-technik.cz
SK +421 417 073 011 | trans-technik@trans-technik.sk | www.trans-technik.sk
RO +40 265 266 538 | contact@trans-technik.ro | www.trans-technik.ro
PL +48 438 434 050 | biuro@trans-technik.pl | www.trans-technik.pl

ELECTRO-HYDRAULIC PUMP WITH DC MOTOR

Type RE

Tank			Pump			TT-number	
Material, tank design	Type	Volume litre	Type	Q cm3 / revolution	Curve 12V - 2000 W		24V - 3000 W
AL tank	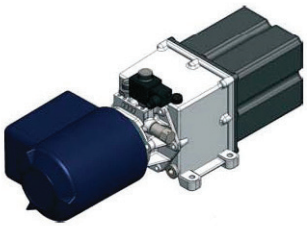	2	1P1	1	I	**0731102.101**	**0731202.101**
			1P2	2	G	**0731102.102**	**0731202.102**
			1P3,1	3.1	E	**0731102.131**	**0731202.131**
		3	1P1	1	I		**0731203.101**
			1P2	2	G	**0731103.102**	**0731203.102**
			1P3,1	3.1	E	**0731103.131**	**0731203.131**
		5	1P1	1	I		**0731205.101**
			1P2	2	G	**0731105.102**	**0731205.102**
			1P3,1	3.1	E	**0731105.131**	**0731205.131**
Small steel tank	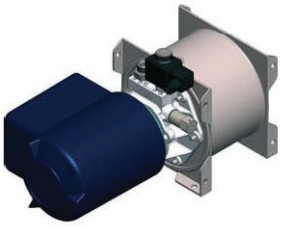	2	1P1	1	I	**0731102.201**	**0731202.201**
			1P2	2	G	**0731102.202**	**0731202.202**
			1P3,1	3.1	E	**0731102.331**	**0731202.331**
		3	1P1	1	I	**0731103.201**	**0731203.201**
			1P2	2	G	**0731103.202**	**0731203.202**
			1P3,1	3.1	E	**0731103.331**	**0731203.331**
		4	1P1	1	I	**0731104.201**	**0731204.201**
			1P2	2	G	**0731104.202**	**0731204.202**
			1P3,1	3.1	E	**0731104.331**	**0731204.331**
		5	1P1	1	I	**0731105.201**	**0731205.201**
			1P2	2	G	**0731105.202**	**0731205.202**
			1P3,1	3.1	E	**0731105.331**	**0731205.331**
		6	1P1	1	I	**0731106.201**	**0731206.201**
			1P2	2	G	**0731106.202**	**0731206.202**
			1P3,1	3.1	E	**0731106.331**	**0731206.331**
Steel tank		7	1P1	1	I	**0731107.201**	**0731207.201**
			1P2	2	G		**0731207.202**
			1P3,1	3.1	E	**0731107.231**	**0731207.231**
		10	1P2	2	G	**0731110.202**	**0731210.202**
			1P3,1	3.1	E	**0731110.231**	**0731210.231**
			1P4,7	4.7	C	**0731110.247**	**0731210.247**
		15	1P2	2	G		**0731215.202**
			1P3,1	3.1	E	**0731115.231**	**0731215.231**
			1P4,7	4.7	C		**0731215.247**
		20	1P2	2	G		**0731220.202**
			1P3,1	3.1	E	**0731120.231**	**0731220.231**
			1P4,2	4.2	C	**0731120.247**	**0731220.247**

7. page 46

ELECTRO-HYDRAULIC PUMP WITH DC MOTOR

Type STD

Tank			Pump			TT-number	
Material, tank design	**Type**	**Volume litre**	**Type**	**Q** cm3 / revolution	**Curve 12V - 2000 W**		**24V - 3000 W**
AL tank	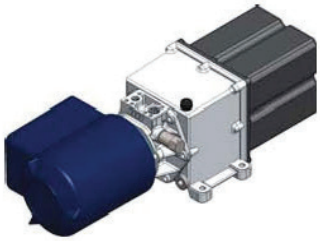	2	1P1	1	I	**0732102.101**	**0732202.101**
			1P2	2	G	**0732102.102**	**0732202.102**
			1P3,1	3.1	E	**0732102.131**	**0732202.131**
		3	1P1	1	I	**0732103.101**	**0732203.101**
			1P2	2	G	**0732103.102**	**0732203.102**
			1P3,1	3.1	E	**0732103.131**	**0732203.131**
		5	1P1	1	I	**0732105.101**	**0732205.101**
			1P2	2	G	**0732105.102**	**0732205.102**
			1P3,1	3.1	E	**0732105.131**	**0732205.131**
Small steel tank		2	1P1	1	I	**0732102.201**	**0732202.201**
			1P2	2	G	**0732102.202**	**0732202.202**
			1P3,1	3.1	E	**0732102.331**	**0732202.331**
		3	1P1	1	I	**0732103.201**	**0732203.201**
			1P2	2	G	**0732103.202**	**0732203.202**
			1P3,1	3.1	E	**0732103.331**	**0732203.331**
		4	1P1	1	I	**0732104.201**	**0732204.201**
			1P2	2	G	**0732104.202**	**0732204.202**
			1P3,1	3.1	E	**0732104.331**	**0732204.331**
		5	1P1	1	I		**0732105.201**
			1P2	2	G	**0732105.202**	**0732205.202**
			1P3,1	3.1	E	**0732105.331**	**0732205.331**
		6	1P1	1	I	**0732106.201**	**0732206.201**
			1P2	2	G	**0732106.202**	**0732206.202**
			1P3,1	3.1	E	**0732106.331**	**0732206.331**
Steel tank		7	1P1	1	I	**0732107.201**	**0732207.201**
			1P2	2	G	**0732107.202**	**0732207.202**
			1P3,1	3.1	E	**0732107.231**	**0732207.231**
		10	1P1	1	I	**0732110.201**	**0732210.201**
			1P2	2	G		**0732210.202**
			1P3,1	3.1	E	**0732110.231**	**0732210.231**
		15	1P1	1	I		**0732115.201**
			1P2	2	G		**0732215.202**
			1P3,1	3.1	E	**0732115.231**	**0732215.231**
		20	1P2	2	G	**0732120.202**	**0732220.202**
			1P3,1	3.1	E	**0732120.231**	**0732220.231**

7. page 47

ELECTRO-HYDRAULIC PUMP STD

Horizontal connection of the distribution elements to the electro-hydraulic pump standard
It is necessary to order a level plate and a control (solenoid) valve for the selected unit.

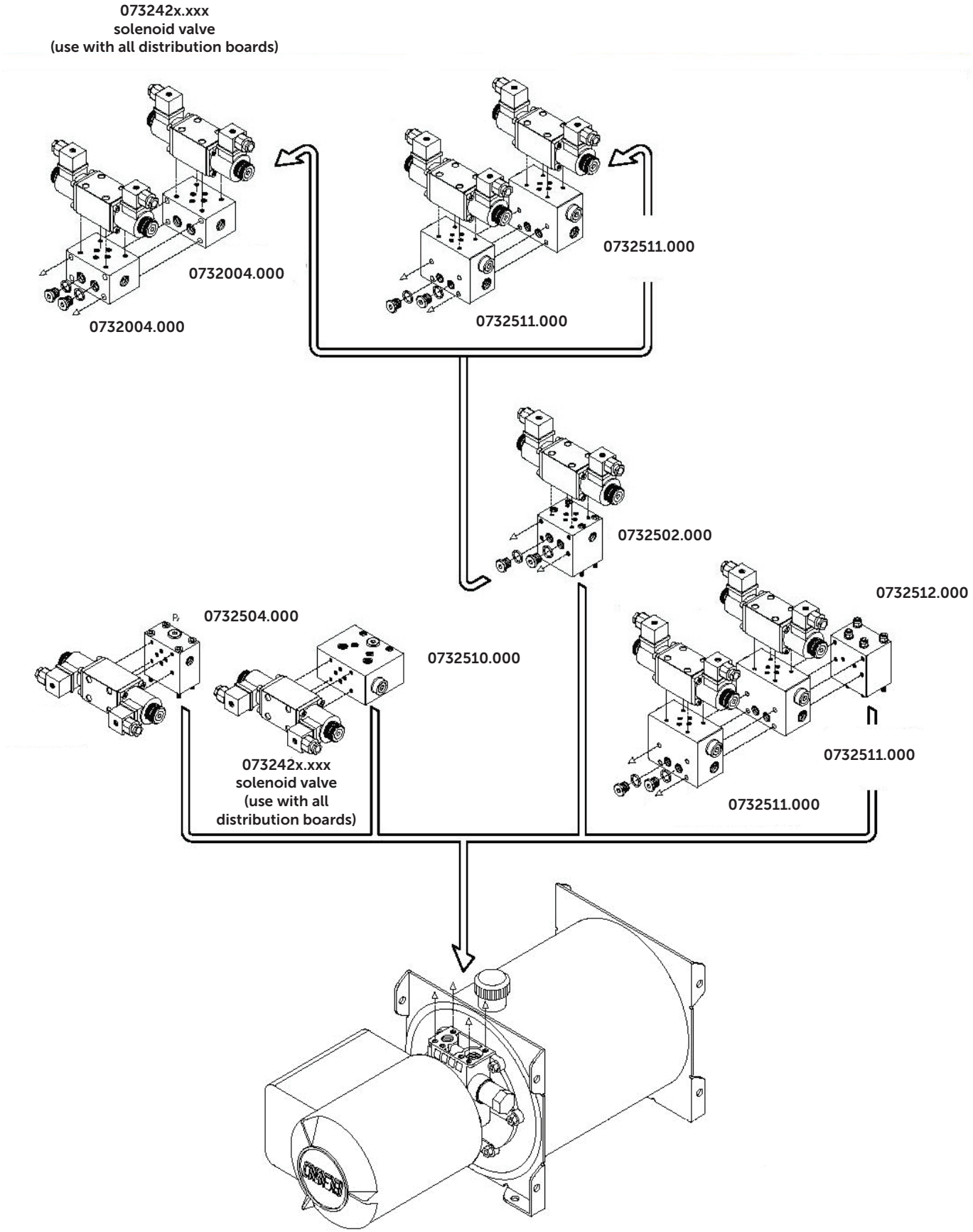

Type STD
Electro-hydraulic pump with 12 or 24V DC motor type STD (standard)

Type STD is designed for two-way cylinders, dimensionally and power-wise the same as type RE, with the same curves and charts for type determination.

Hydraulic diagram for type STD.

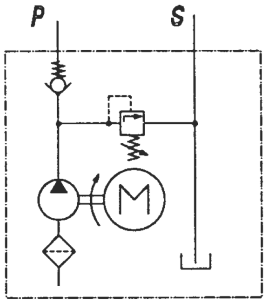

Characteristics: 12V / 2000 W or 24V / 3000 W DC motor, up to 5 litres can be with Al oil tank, other tanks made of steel. Gear pump, check valve and adjustable safety valve - manual or solenoid valve control.

Usage: Electro-hydraulic units (valves) can be prepared according to your requirements, for example, for lifting platforms, snow ploughs, work platforms, etc. Installation with manual or electric control.

Other accessories: double check valve, push-button control, end of stroke switch.

Electromagnetic double solenoid valves for electro-hydraulic aggregates type STD (standard)

Diagram	TT-number	Type and description
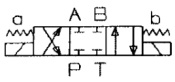	**0732421.012**	15 A112V
	0732421.024	15 A124V
	0732422.012	15 A2 12V
	0732422.024	15 A2 24V
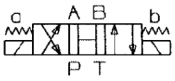	**0732424.012**	15 A4 12V
	0732424.024	15 A4 24V
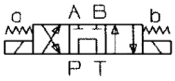	**0732425.012**	15 A512V
	0732425.024	15 A5 24V

7. page 49

DIAGRAM OF BATTERY CONNECTION TO THE MOTOR OF THE ELECTRO-HYDRAULIC UNIT

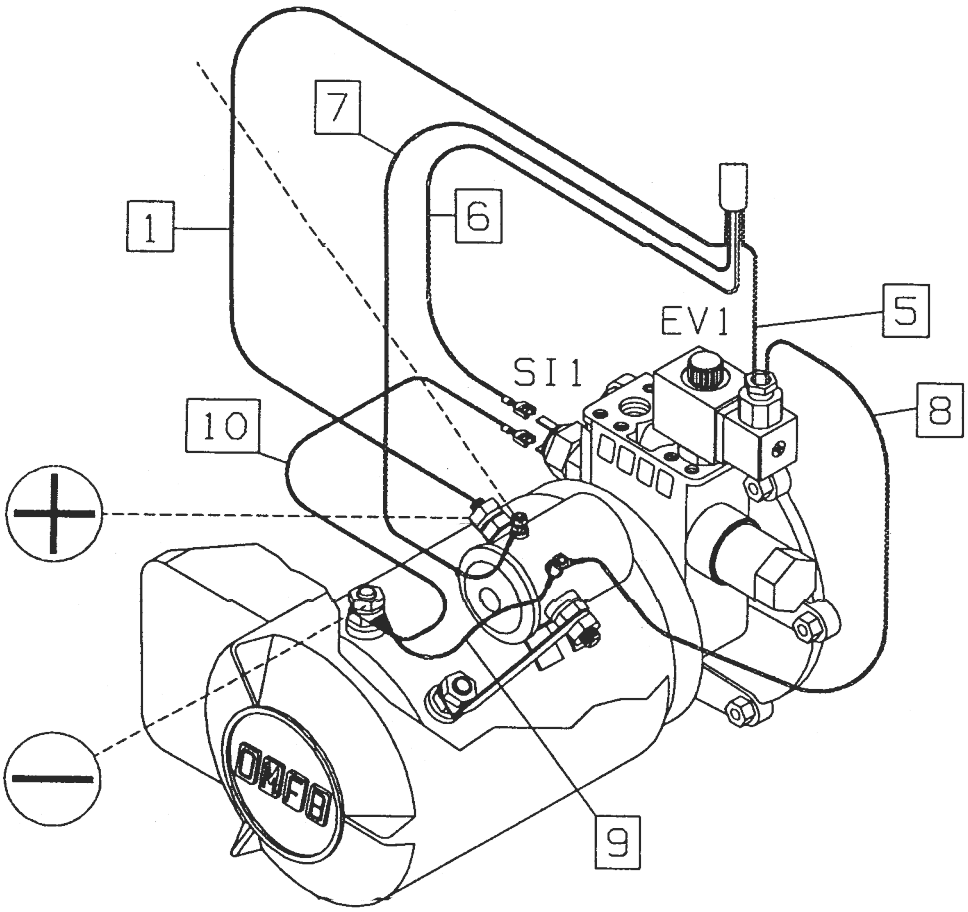

CZ +420 548 424 011 | info@trans-technik.cz | www.trans-technik.cz
SK +421 417 073 011 | trans-technik@trans-technik.sk | www.trans-technik.sk
RO +40 265 266 538 | contact@trans-technik.ro | www.trans-technik.ro
PL +48 438 434 050 | biuro@trans-technik.pl | www.trans-technik.pl

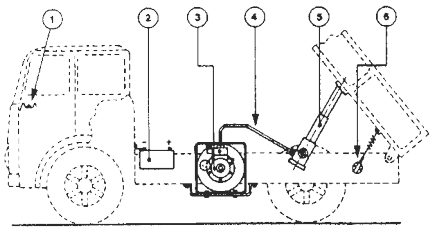

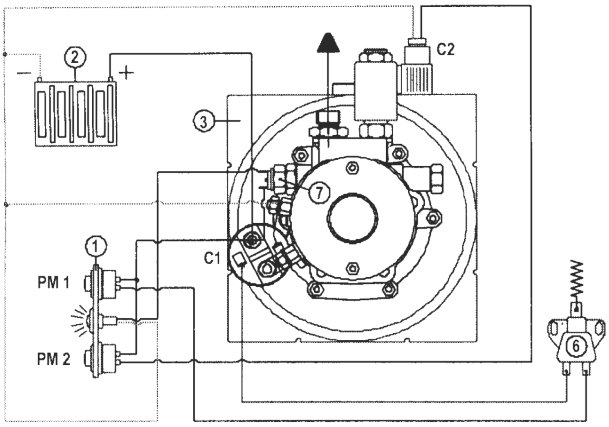

C1 - remote controlled switch
C2 - electro-magnetic valve
PM - button for lifting
PM2 - button for tipping
1 - button - control panel
2 - battery
3 - complete electro-hydraulic pump
4 - oil supply to the cylinder
5 - cylinder
6 - cylinder stroke limit switch
7 - pressure indicator

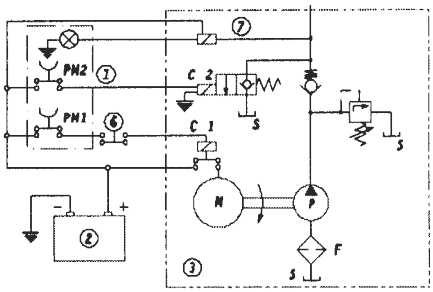

Hydraulic diagram for type RE

Installation instructions

- **mounting:** these aggregates are designed for horizontal mounting
- **electrical connection:** must be made in the correct, prescribed manner for the selection of the electrical conduit at the given battery voltage
- **oil tank:** used hydraulic oil of excellent quality must have a viscosity of 3.5 to 5.5°ENGLER at 50°C, viscosity indicators 140-160. It is recommended to follow the principles of pipe care and cleaning
- **starting the machine:** after completing the hydraulic and electrical connection, perform several test cycles with no load.
  Check the oil level. Ensure that the required characteristics (max pressure, work/pause ratio) are within the range of values of diagrams a, b, c, d
- **maintenance:** regularly check the electrical connection points, the level and degree of cleaning of the hydraulic oil
- **selection of electrical cables:** for sizing in the electrical supply section
  copper conductor: for current **up to 180A -** cable diameter 8 mm,
  for current **from 180 to 250A** - cable diameter 10 mm

Troubleshooting

In case of faulty operation, check the following:

1. battery level
2. sufficient voltage for the motor (use a voltmeter to measure the voltage at the motor terminals, must be 12V or 24V)
3. electrical connections (cleaning of connectors and connecting points of the battery, motor, control panel, electromagnetic valve, and micro switches)
4. hydraulic oil (quantity, degree of contamination and wear)
5. cylinder load (the load value must be compatible with the A.B.C.D charts)

ELECTROHYDRAULIC PUMP - ACCESSORIES

0731301.000
Cylinder stroke limit switch 12 A
for 12 and 24V
Use for power interruption electro-hydraulic unit or for controlling electromagnetic valves

0731302.000
Pump control from the cab - push button
With LED light for RE

0731303.000
Mobile pump control - two buttons
For RE

0731303.100
Pump control by mobile head. switch 4 tl. for STD

0732303.200
Mobile pump control 2 tl. for STD

0732303.400
Mobile pump control 4 tl. for STD

0731310.000
Cylinder stroke limit switch 12A for 12 and 24V

Spare parts

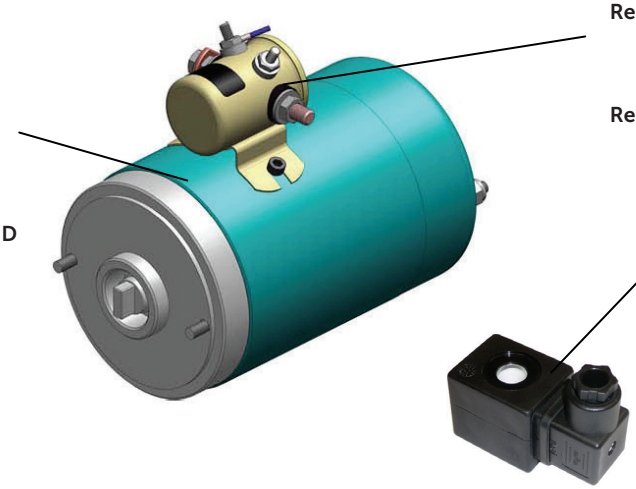

0731601.012
Motor for hydraulic aggregate 12V, 2000W, ND

0731601.024
Motor for hydraulic aggregate 24V, 3000W, ND

0731306.012
Remote controlled switch 12V

0731306.024
Remote controlled switch 24V

0731602.012
12V coil

0731602.024
24V coil

7. page 52

Cleaning instructions for solenoid valve type EPK RE

1. Disconnect the pump from the hydraulic and electrical circuits

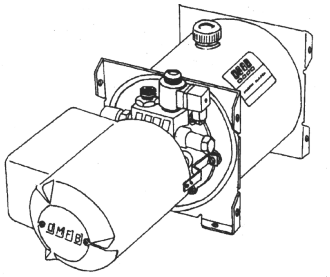

2. Unscrew the selenium coil lock nut from the pin of the solenoid valve

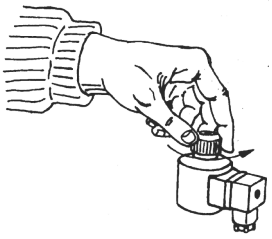

3. Download the coil from the solenoid valve

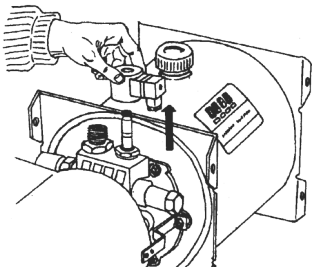

4. Unscrew the electric valve

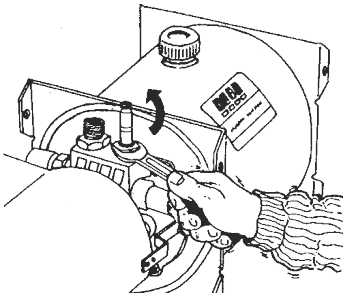

5. Blow out the punching area, check that it is free of dirt

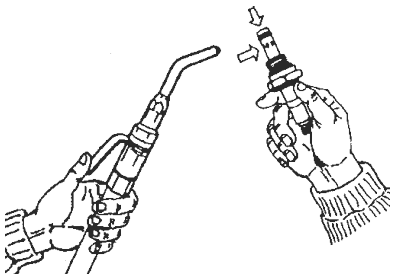

6. Reinstall the valve with a tightening torque of 40 Nm using a torque wrench

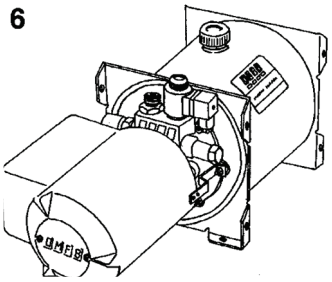

7. page 53

0735110.025
Hydraulic unit without controller, 12V, 1.8 kW, 1P2.5, max. pressure 150 bar, single-acting (RE), 10l, steel tank

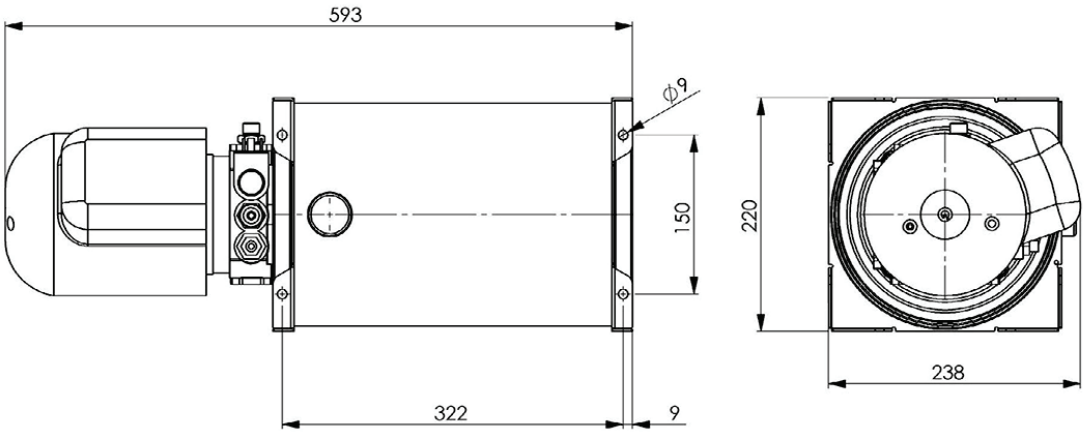

TT-number	Voltage V	Power kW	Q cm3 / revolution	Tank volume l	Tank material	Function	Weight kg/pc
0735110.025	12	1.8.0	**2.5**	10	steel	active	15.0

7. page 54

0735101.000
Two-button controller, type RE, cable length 5 m
Weight: 0.5 kg

The controller is not included in the delivery of the unit.

FLOW VERSUS PRESSURE DIAGRAM

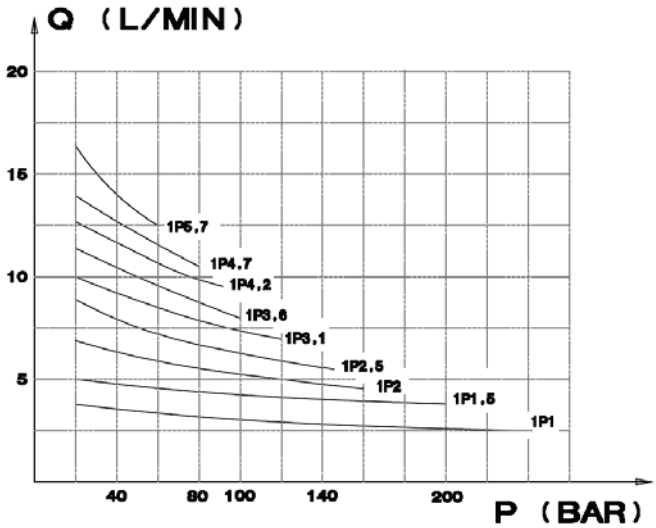

DRIVER WIRING DIAGRAM

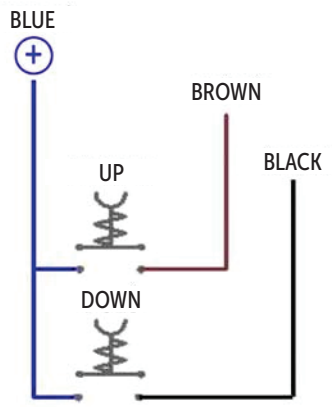

7. page 55

Wiring diagram of the hydraulic circuit of a gear or piston pump

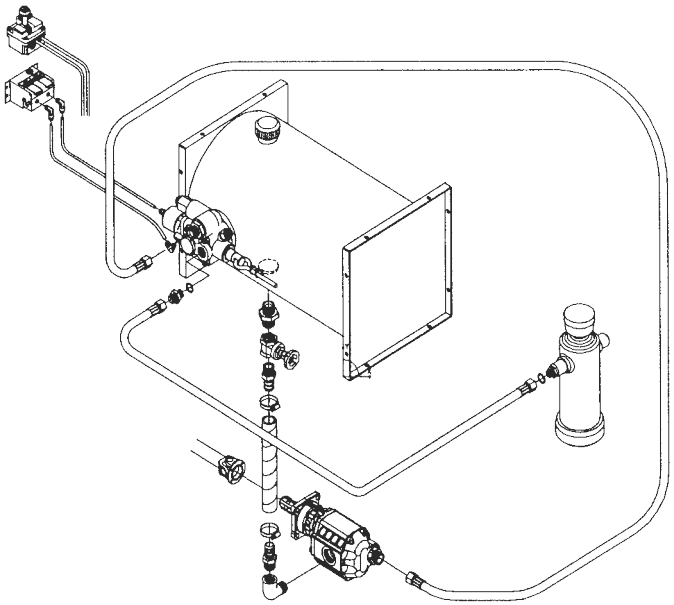

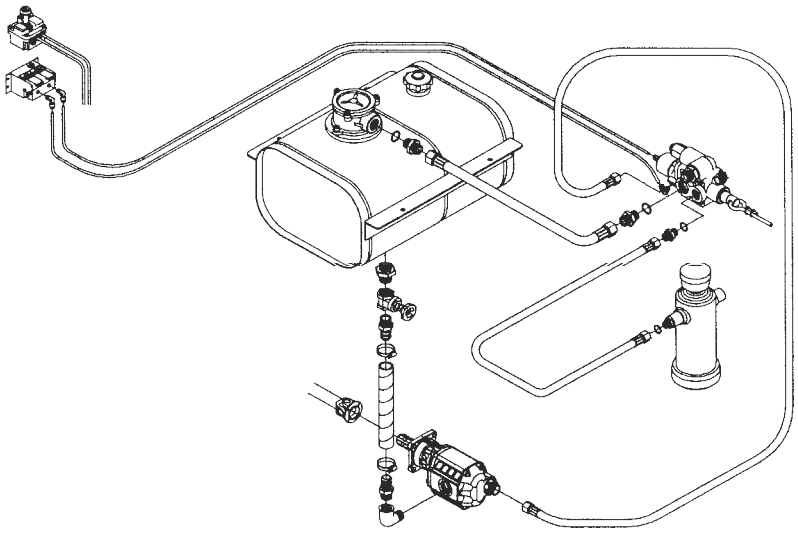

7. page 56

GEAR PUMPS NPLH - ISO

Use for small and light tippers

Hydraulic oil: according to ISO standards
Oil temperature: -10 to 35°C
Direction of rotation: bidirectional (left or right)
Suction pressure: 0.3–2 bar

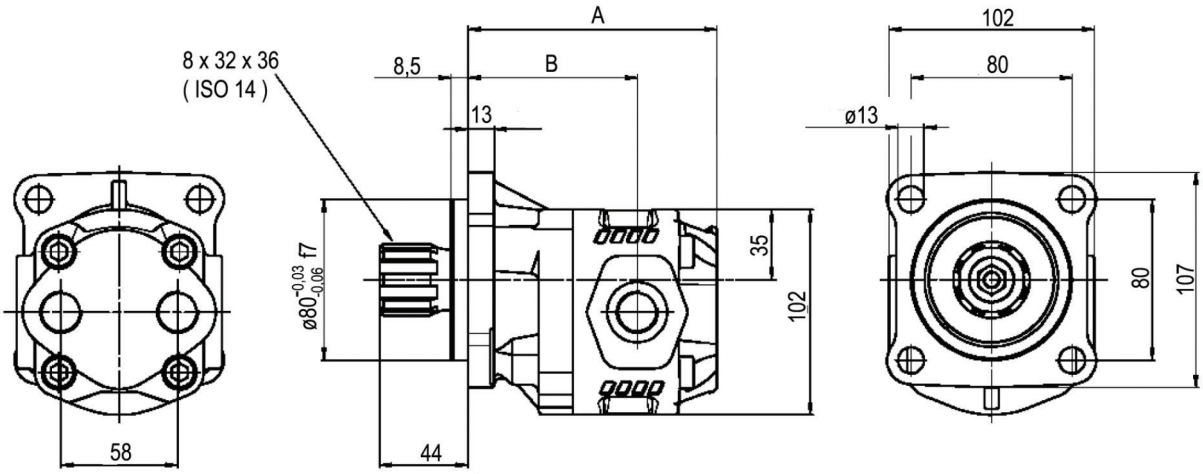

TT-number rotation bidirectional	Type pump	A mm	B mm	Input	Output	Weight kg/pc
0733011.000	NPLH - 6	108	74.5	1/2'	1/2'	5.1
0733012.000	NPLH - 10	114	80.5			5.5
0733013.000	NPLH - 16	117	77.5			6.1
0733014.000	NPLH - 20	123.5	84			6.4
0733015.000	NPLH - 25	131.5	89	3/4'	3/4'	6.7
0733016.000	NPLH - 32	142.5	100			7.1
0733017.000	NPLH - 40	111	164			7.7

7. page 57

Operating Characteristics

Pump type	Displacement cm³/rev.	Max. pressure			Max. continuous speed	Max. intermittent speed	Min. speed
		P 1	P 2	P 3			
		bar			Revolutions/minute		
NPLH - 16	16,035 280		310	325	2200	3000	300
NPLH - 20	20,123 260		280	290			
NPLH - 25	25,154 220		250	260			
NPLH - 32	32,042 190		210	220	2000	2800	

P 1 - max. continuous pressure (100%)
P 2 - max. intermittent pressure (max. 20 sec.)
P 3 - max. peak pressure (max. 6 sec.)

Determination of oil inlet and outlet

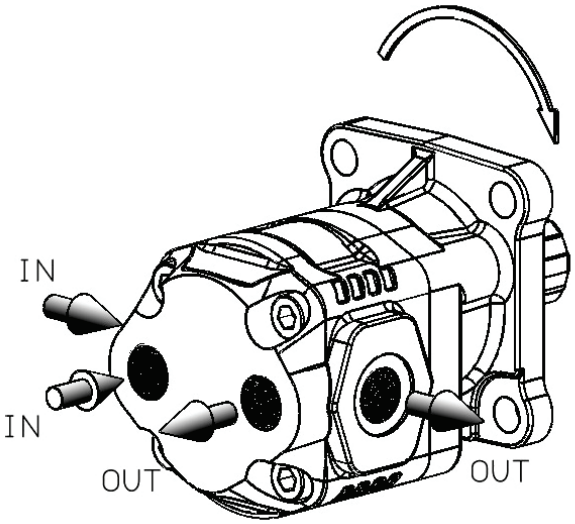

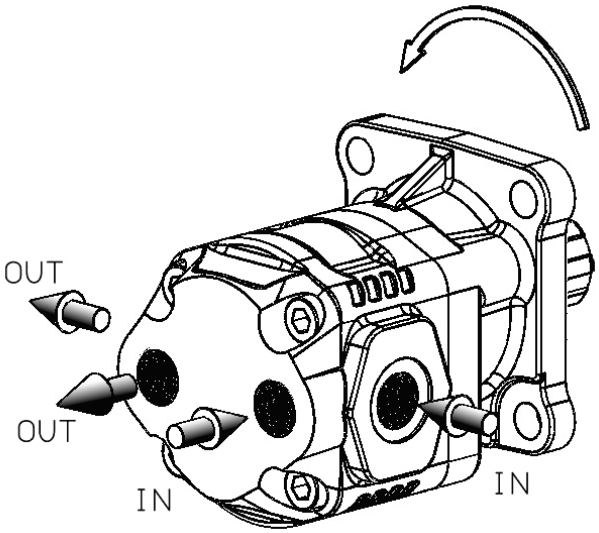

7. page 58

CZ +420 548 424 011 | info@trans-technik.cz | www.trans-technik.cz
SK +421 417 073 011 | trans-technik@trans-technik.sk | www.trans-technik.sk
RO +40 265 266 538 | contact@trans-technik.ro | www.trans-technik.ro
PL +48 438 434 050 | biuro@trans-technik.pl | www.trans-technik.pl

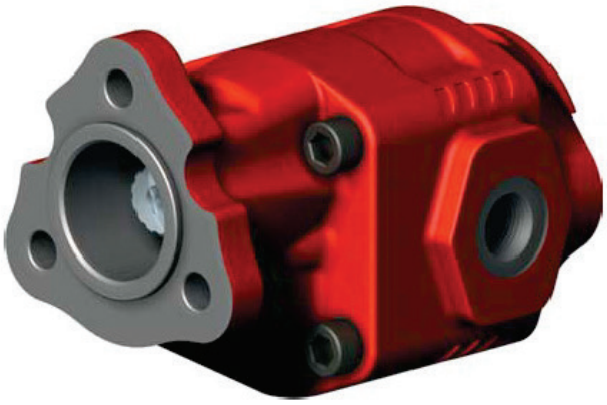

Hydraulic oil: according to DIN standards
Oil temperature: -10 to 35°C
Direction of rotation: bidirectional (left or right)
Suction pressure: 0.3–2 bar

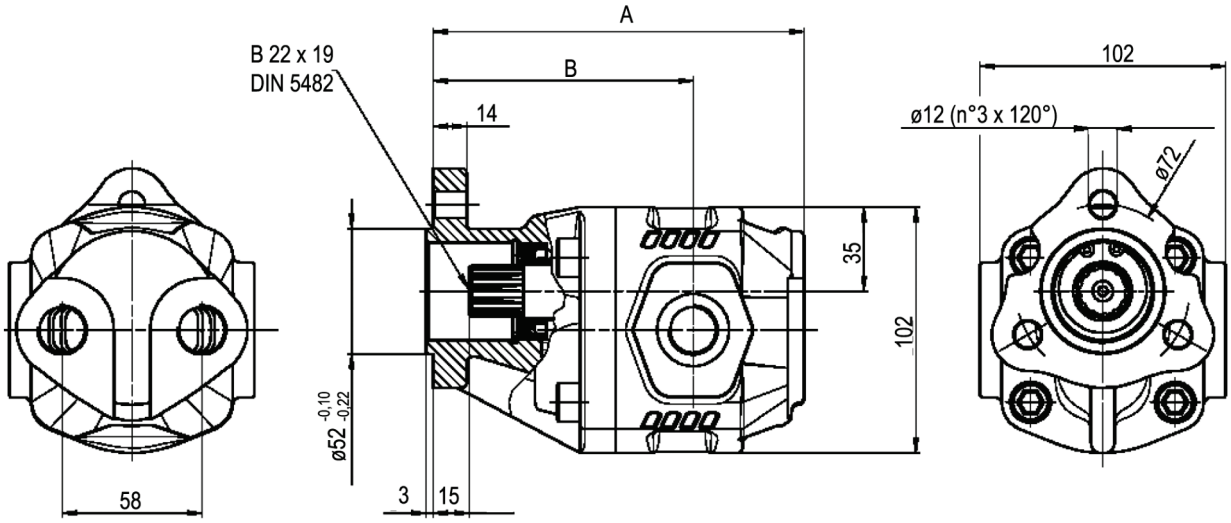

TT-number rotation bidirectional	Type of pump	A mm	B mm	Input	Output	Weight kg/pc
0733001.000	NPLH - 6	132	98.5	1/2'	1/2'	4.7
0733002.000	NPLH - 10	138	104.5			5
0733003.000	NPLH - 16	147.5	101.5			5.3
0733004.000	NPLH - 20	154	108			5.7
0733005.000	NPLH - 25	162	113	3/4'	3/4'	5.9
0733006.000	NPLH - 32	173	124			6.3

7. page 59

GEAR PUMPS - USE OF HOSE COUPLINGS

Use only hose couplings with a cylindrical profile, never use couplings with a conical profile.

The wrong solution - do not use

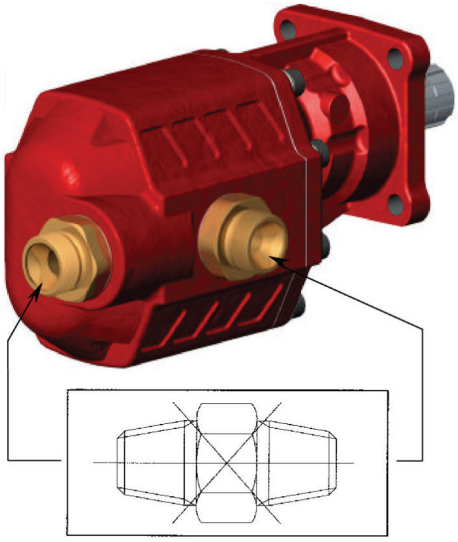

The correct solution

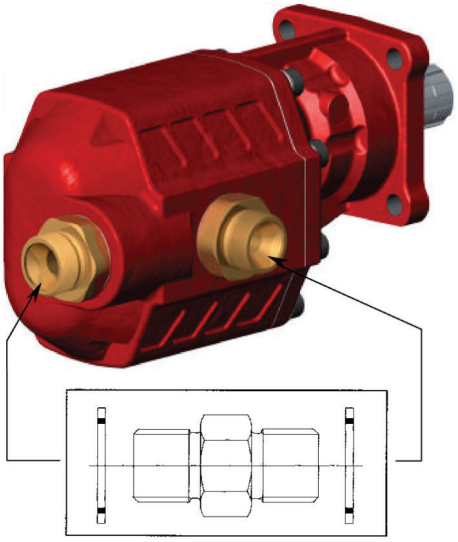

CONNECTING SHAFT P.T.O. / PUMP

0761114.106
Connecting shaft between P.T.O. UNI
6 x 21 x 25 / UNI pump 6 x 21 x 25

0761116.000
Connecting shaft between P.T.O. UNI
6 x 21 x 25 / pump UNI 13 DIN

0761114.500
Connecting shaft between P.T.O. UNI
6 x 21 x 25 / UNI pump
6 x 21 x 25 + mounting kit

0761116.500
Connecting shaft between P.T.O. UNI
6 x 21 x 25 /pump UNI 13 DIN
+ mounting set

0761201.000
Adapter between PTO UNI
6 x 21 x 25 / pump. ISO 8 x 32 x 36
+ mounting set

PMS HAND PUMP

Double acting hand pump suitable for single acting cylinders.
The pump can be mounted on the oil tank and equipped with an integrated control valve.
It comes in three sizes.

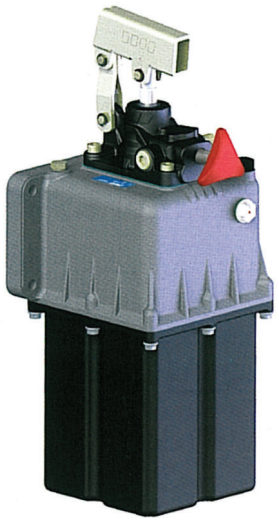

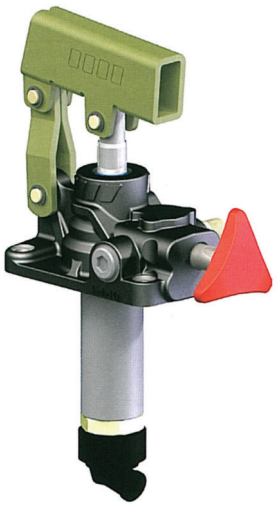

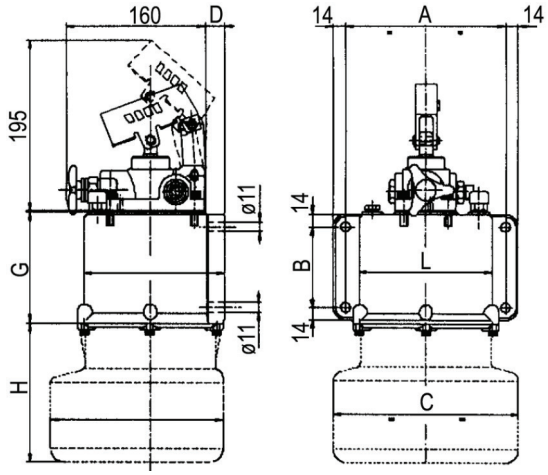

Hydraulic diagram

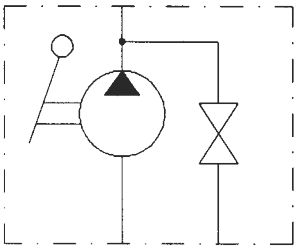

Dimensions mm									
Tank volume	**A**	**B**	**C**	**D**	**E**	**F**	**G**	**H**	**L**
1 l.	96	110	0	8	130	0	138	2	122
2 l.	180	90	147	22	166	147	125	20	150
3 l.								60	
5 l.								174	
7 l.								294	
10 l.			208			195		275	

TT-number of the PMS pump							
Pump type	**Pump without tank**	**Tank volume**					
		1 l	2 l	3 l	5 l	7 l	10 l
PMS 12	**0734012.000**	**0734012.001**	**0734012.002**	**0734012.003**	**0734012.005**	**0734012.007**	**0734012.010**
PMS 25	**0734025.000**	**0734025.001**	**0734025.002**	**0734025.003**	**0734025.005**	**0734025.007**	**0734025.010**
PMS 45	**0734045.000**	**-**	**0734045.002**	**0734045.003**	**0734045.005**	**0734045.007**	**0734045.010**

Technical data					
Pump type	**Max. pressure** bar	**Displacement parameters**			**Weight** kg
		Displacement / stroke cm^3	**Displacement / thrust** cm^3	**Displacement / pressure** cm^3	
PMS 12	350	12	6.1	5.9	2.8
PMS 25	300	25	13.4	11.6	2.9
PMS 45	270	45	23.7	21.3	3.2

0734100.000
Lever
Included with the hand pump

7. page 61

PMI HAND PUMP

Double acting hand pump suitable for double acting cylinders.
The pump can be mounted on the oil tank and equipped
with an integrated control valve.
It comes in three sizes.

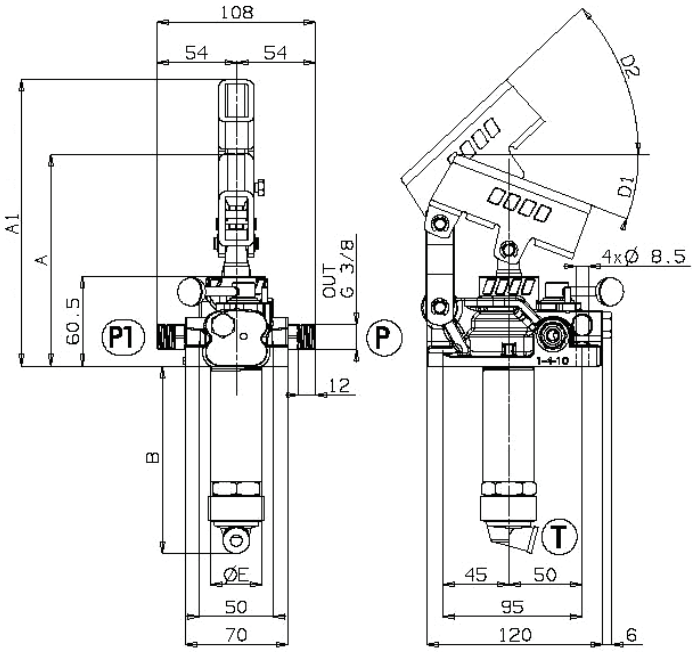

Hydraulic diagram

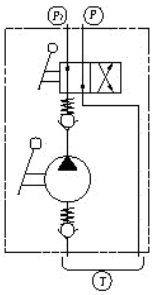

Dimensions mm						
Pump type	**A**	**A1**	**B**	**D1**	**D2**	**E**
PMI 12	143	187	120	18.5	45	35
PMI 25	142	193	127	20	45	35
PMI 45	141	193	138	20	45	42

TT-number of the PMS pump							
Pump type	**Pump without tank**	**Tank volume**					
		1 l	2 l	3 l	5 l	7 l	10 l
PMI 12	**0734017.000**	**0734017.001**	**0734017.002**	**0734017.003**	**0734017.005**	**0734017.007**	**0734017.010**
PMI 25	**0734027.000**	**0734027.001**	**0734027.002**	**0734027.003**	**0734027.005**	**0734027.007**	**0734027.010**
PMI 45	**0734047.000**	**0734047.001**	**0734047.002**	**0734047.003**	**0734047.005**	**0734047.007**	**0734047.010**

Technical data					
Type of pump	**Max. pressure** bar	**Displacement parameters**			**Weight** kg
		Displacement / stroke cm^3	**Displacement / thrust** cm^3	**Displacement / pressure** cm^3	
PMI 12	350	12	6.1	5.9	2.8
PMI 25	300	25	13.4	11.6	2.9
PMI 45	270	45	23.7	21.3	3.2

0734100.000
Lever
Included with the hand pump

7. page 62

0741001.000
Valve FP 80 - CE / pneumatic control
The valves are pneumatically operated with a minimum pressure of 5 bar (max. 9 bar).

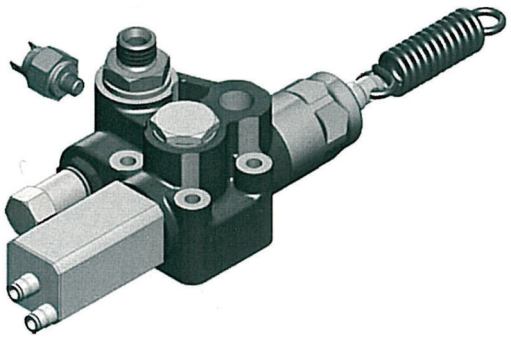

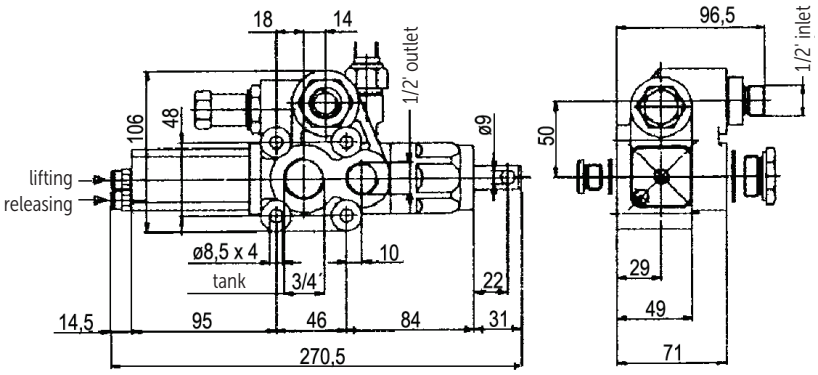

Operational values

TYPE	Pressure		Flow l/min.	Weight kg
	operational bar	maximum bar		
FP 80 - CE	180	250	80	2.550

Hydraulic diagram

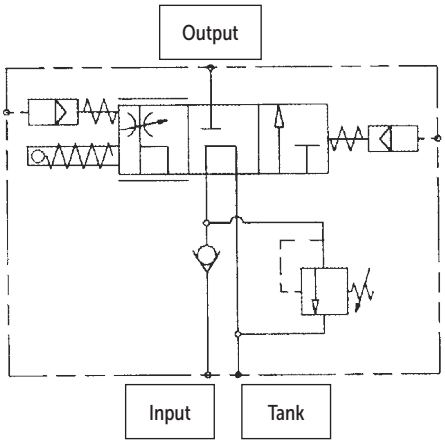

These three-position valves are equipped with:
- connection for the cable defining the stroke
- pressure relief valve (standard setting 180 Bar)
- pressure indicator

7. page 63

FE - 40 CE
Hydraulic distribution valves - terminal - electric

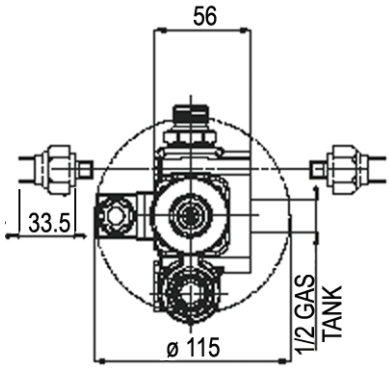

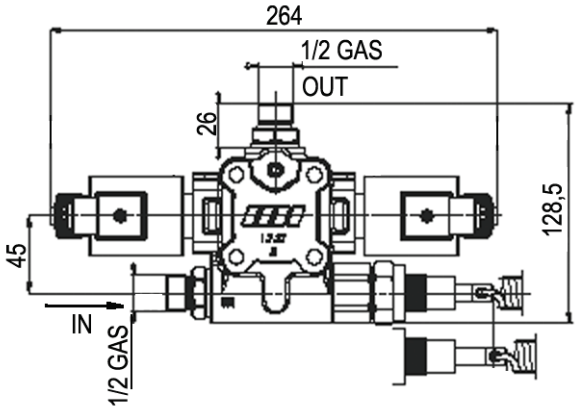

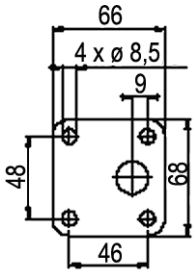

Hydraulic diagram

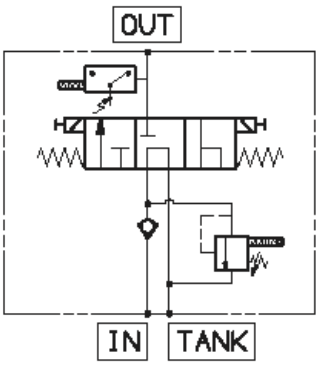

Operational values

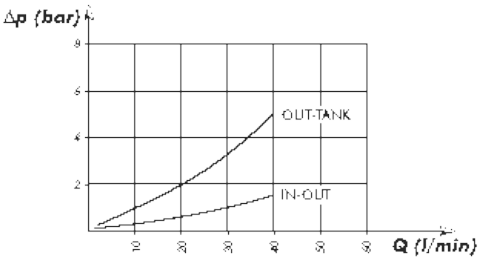

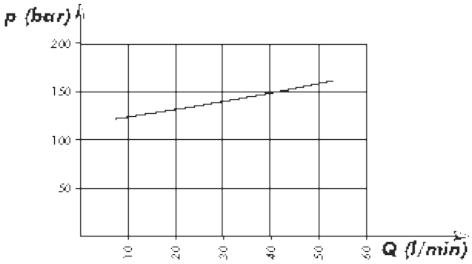

Operational values

TYPE	TT-number	Pressure		Flow l/min.	Weight kg
		operational bar	maximum bar		
FE - 40 CE 12V	0741012.012	140	240	40	2.3
FE - 40 CE 24V	0741012.024				

7. page 64

THREE-WAY TWO-POSITION DISTRIBUTION VALVE SEL 250-2

Valve SEL 250-2
pneumatic control
AUTO/TRAILER

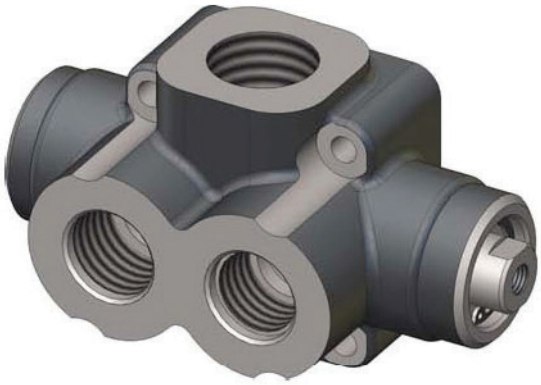

Hydraulic diagram

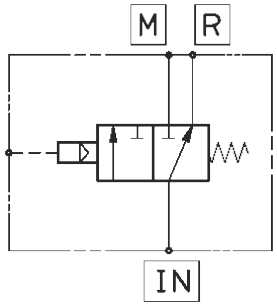

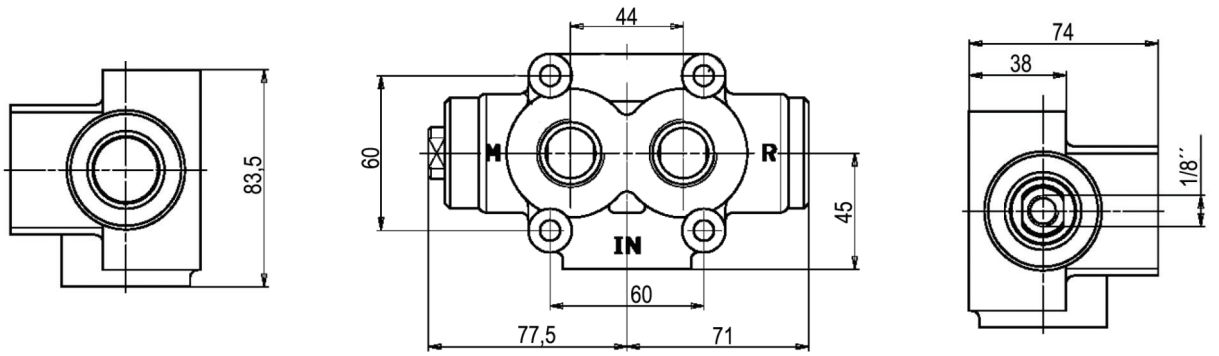

Operational values

TYPE	TT-number	Pressure		Flow l/min.	Weight kg
		operational bar	maximum bar		
SEL 250-2	**0741030.000**	300	350	250	2.5

7. page 65

Steel tank

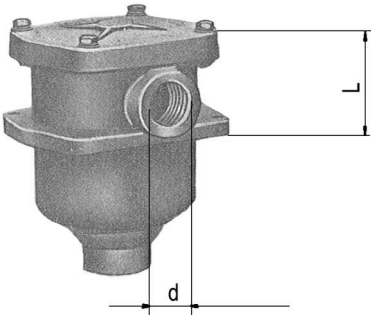

Filter

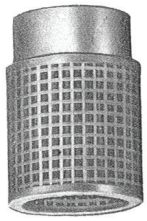

Filter insert
(spare part)

Name	TT tank number	TT filter number	TT number filter insert - ND	ca L mm	d thread
21 litre tank with filter mounting preparation	0741301.000	0741301.200	0741301.101	55	½"
40 litre tank with filter mounting preparation	0741303.000	0741303.100	0741303.101	70	¾"
60 litre tank with filter mounting preparation	0741305.000	0741303.100	0741303.101	70	¾"
100 litre tank with filter mounting preparation	0741307.001	0741307.100	0741307.101	70	1"

The filter also includes a filter insert. The filter's permeability is 60 microns.

0741301.000
Oil tank 21 litres
With filter mounting preparation

0741303.000
Oil tank 40 litres
With filter mounting preparation

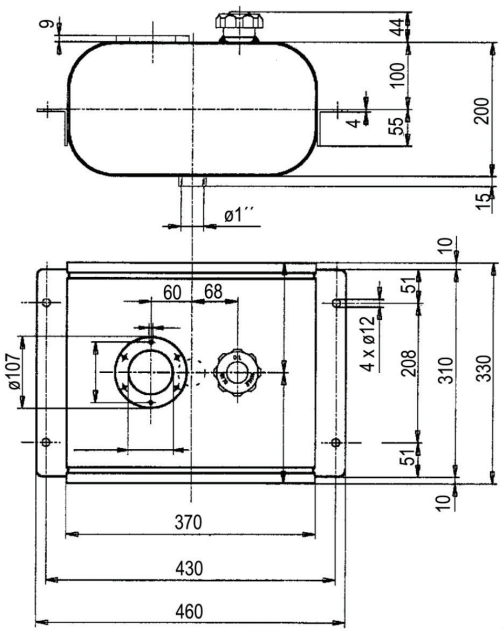

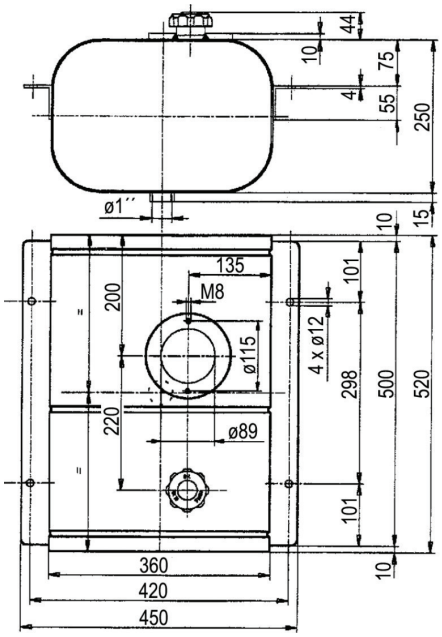

7. page 66

0741305.000
Oil tank 60 litres
With filter mounting preparation

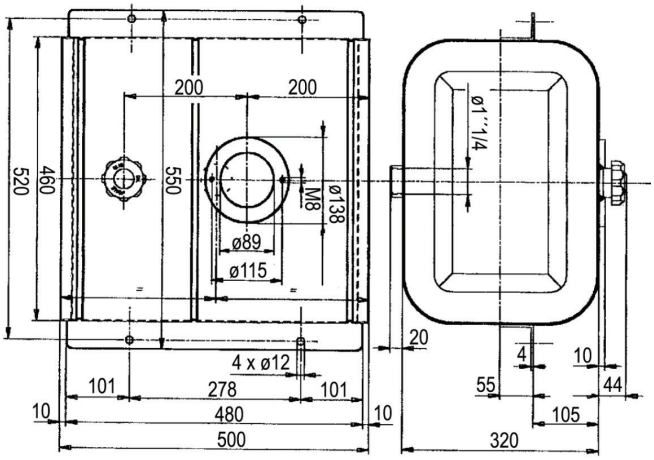

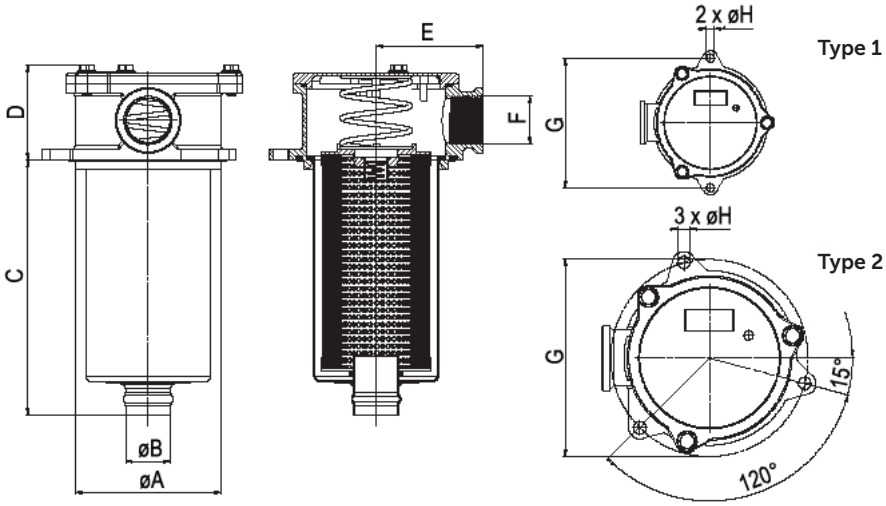

Filter TT-number	Type	Replacement insert filter TT-number	Filtration µm	Flow l/min.	Dimensions							
					F thread	A mm	B mm	C mm	D mm	E mm	G mm	H mm
0741301.200	Type 1	**0741301.101**	90	35	½"	66	24	90	50	50	90	7
0741303.100		**0741303.101**		70	¾"	86	28	106	70	67	115	9
0741307.100		**0741307.101**		110	¾"	86	28	150	70	67	115	9

7. page 67